DS-2CD2086G2-I(U)
8 MP IR Fixed Bullet Network Camera

- 1/1.8" Progressive Scan CMOS
- 3840 × 2160 @ 20fps
- 2.8/4/6 mm fixed lens
- 120dB WDR
- Powered by DarkFighter
- H.265+, H.265, H.264+, H.264
- Built-in micro SD/SDHC/SDXC card slot, up to 256 GB
- IP67
- Built-in microphone (Optional)
- **Human and vehicle classification alarm** based on deep learning.

AcuSense

Empowered by deep learning algorithms, Hikvision AcuSense technology brings human or vehicle target classification alarms to front- and back-end devices. The system can greatly reduce false alarms generated by targets other than humans or vehicles, vastly improving alarm efficiency and effectiveness.

Specifications

Camera	
Image Sensor	1/1.8" Progressive Scan CMOS
Min. Illumination	Color: 0.003 Lux @ (F1.6, AGC ON), 0 Lux with IR
Shutter Speed	1/3s to 1/100,000s
Slow Shutter	Yes
Wide Dynamic Range	120dB
Day & Night	IR Cut Filter
Angle Adjustment	Pan: 0 to 360°, tilt: 0 to 90°, rotation: 0 to 360°
Power-off Memory	Yes
Lens	
Lens Type & FOV	2.8 mm, horizontal FOV: 102°, vertical FOV: 55°, diagonal FOV: 120° 4 mm, horizontal FOV: 78°, vertical FOV: 43°, diagonal FOV: 92° 6 mm, horizontal FOV: 50°, vertical FOV: 27°, diagonal FOV: 59°
Aperture	F1.6
Lens Mount	M16
Illuminator	
IR Range	40 m
Wavelength	850 nm
Smart Supplement Light	Yes
Video	
Max. Resolution	3840 × 2160
Main Stream	50Hz: 20fps (3840 × 2160, 3072 × 1728), 25fps (2688 × 1520,1920 × 1080, 1280 × 720) 60Hz: 20fps (3840 × 2160, 3072 × 1728), 30fps (2688 × 1520,1920 × 1080, 1280 × 720)
Sub Stream	50Hz: 25fps (640 × 480, 640 × 360, 320 × 240) 60Hz: 30fps (640 × 480, 640 × 360, 320 × 240)
Third Stream	50Hz: 25fps (1280 × 720, 640 × 480, 640 × 360, 320 × 240) 60Hz: 30fps (1280 × 720, 640 × 480, 640 × 360, 320 × 240)
Video Compression	Main stream: H.265+/H.264+/H.265/H.264 Sub-stream: H.265/H.264/MJPEG Third stream: H.265/H.264
Video Bit Rate	32 Kbps to 16 Mbps
H.264 Type	Baseline Profile, Main Profile, High Profile
H.265 Type	Main Profile
Stream Type	Main stream/sub-stream/third stream
Scalable Video Coding (SVC)	Yes
Region of Interest (ROI)	1 fixed region for each stream
** When the main stream resolution is 3840 × 2160, max frame rate is 20 fps for all streams.*	
Audio(-U)	
Environment Noise Filtering	Yes

Audio Sampling Rate	8 kHz,16 kHz,32 kHz,44.1 kHz,48 kHz
Audio Compression	G.711/G.722.1/G.726/MP2L2/PCM/MP3
Audio Bit Rate	64Kbps(G.711)/16Kbps(G.722.1)/16Kbps(G.726)/32-192Kbps(MP2L2)/8Kbps-320Kbps(MP3)
Audio Type	mono sound
Network	
Simultaneous Live View	Up to 6 channels
API	ONVIF (PROFILE S, PROFILE G), ISAPI, SDK
Protocols	TCP/IP, ICMP, HTTP, HTTPS, FTP, DHCP, DNS, DDNS, RTP, RTSP, PPPoE, NTP, UPnP, SMTP, SNMP, IGMP, 802.1X, QoS, IPv4, IPv6, UDP, Bonjour, SSL/TLS
Smooth Streaming	Yes
User/Host	Up to 32 users. 3 user levels: administrator, operator and user
Security	Password protection, complicated password, HTTPS encryption, 802.1X authentication (EAP-MD5), watermark, IP address filter, basic and digest authentication for HTTP/HTTPS, WSSE and digest authentication for ONVIF, TLS 1.2
Network Storage	MicroSD/SDHC/SDXC card (256 GB), local storage and NAS (NFS,SMB/CIFS), ANR
Client	iVMS-4200, Hik-Connect, Hik-Central
Web Browser	Plug-in required live view: IE8+, Chrome41.0-44, Firefox30.0-51, Safari8.0-11 Plug-in free live view: Chrome 57.0+, Firefox 52.0+
Image	
Day/Night Switch	Day/Night/Auto/Schedule
Image Enhancement	BLC, HLC, 3D DNR
Image Settings	Saturation, brightness, contrast, sharpness, AGC, and white balance are adjustable by client software or web browser
Interface	
Audio(-U)	Built-in microphone
On-board Storage	Built-in micro SD, up to 256 GB
Hardware Reset	Yes
Communication Interface	1 RJ45 10M/100M self-adaptive Ethernet port
Smart Feature-Set	
Perimeter Protection	line crossing detection, intrusion detection, region entrance detection, region exiting detection (Human&Vehicle classification)
Face Capture	Yes
Basic Event	Motion detection, video tampering alarm, exception (network disconnected, IP address conflict, illegal login, HDD full, HDD error), scene change detection
General	
Web Client Language	32 languages: English, Russian, Estonian, Bulgarian, Hungarian, Greek, German, Italian, Czech, Slovak, French, Polish, Dutch, Portuguese, Spanish, Romanian, Danish, Swedish, Norwegian, Finnish, Croatian, Slovenian, Serbian, Turkish, Korean, Traditional Chinese, Thai, Vietnamese, Japanese, Latvian, Lithuanian, Portuguese (Brazil)

General Function	Mirror, password protection, privacy mask, watermark, IP address filter, one-key reset, anti-flicker, three streams, heartbeat
Software Reset	Yes
Linkage Method	Upload to FTP/NAS/memory card, notify surveillance center, send email, trigger recording, trigger capture Trigger recording: memory card, network storage, pre-record and post-record Trigger captured pictures uploading: FTP, HTTP, NAS, Email Trigger notification: HTTP, ISAPI, alarm output, Email
Storage Conditions	-30 °C to 60 °C (-22 °F to 140 °F), humidity 95% or less (non-condensing)
Startup and Operating Conditions	-30 °C to 60 °C (-22 °F to 140 °F), humidity 95% or less (non-condensing)
Power Supply	12 VDC ± 25%; PoE: (802.3af, class 3)
Power Consumption and Current	12 VDC, 0.5 A, max. 6 W PoE: (802.3af, 36V to 57V), 0.2 A to 0.13 A, max. 7.2 W
Power Interface	Φ5.5 mm coaxial power plug
Material	Metal
Camera Dimension	Φ70 ×161.7 mm (2.76" × 6.37")
Package Dimension	216 × 121 × 118 mm (8.5" × 4.8" ×4.6")
Camera Weight	Approx. 500 g (1.1 lb.)
With Package Weight	Approx. 710 g (1.6 lb.)
Approval	
Protection	Ingress protection: IP67 (IEC 60529-2013)
EMC	CE-EMC (EN 55032: 2015, EN 61000-3-2: 2014, EN 61000-3-3: 2013, EN 50130-4: 2011 +A1: 2014); RCM (AS/NZS CISPR 32: 2015); IC (ICES-003: Issue 6, 2016); KC (KN 32: 2015, KN 35: 2015)
Safety	UL (UL 60950-1); CB (IEC 60950-1:2005 + Am 1:2009 + Am 2:2013); CE-LVD (EN 60950-1:2005 + Am 1:2009 + Am 2:2013); BIS (IS 13252(Part 1):2010+A1:2013+A2:2015); LOA (IEC/EN 60950-1)
Environment	CE-RoHS (2011/65/EU); WEEE (2012/19/EU); Reach (Regulation (EC) No 1907/2006)

** Listed resolutions are only selectable options. It does not mean that all streams can work at their maximum resolution at the same time.*

Available Model

DS-2CD2086G2-I (2.8/4/6 mm)
DS-2CD2086G2-IU (2.8/4/6 mm)

Dimension

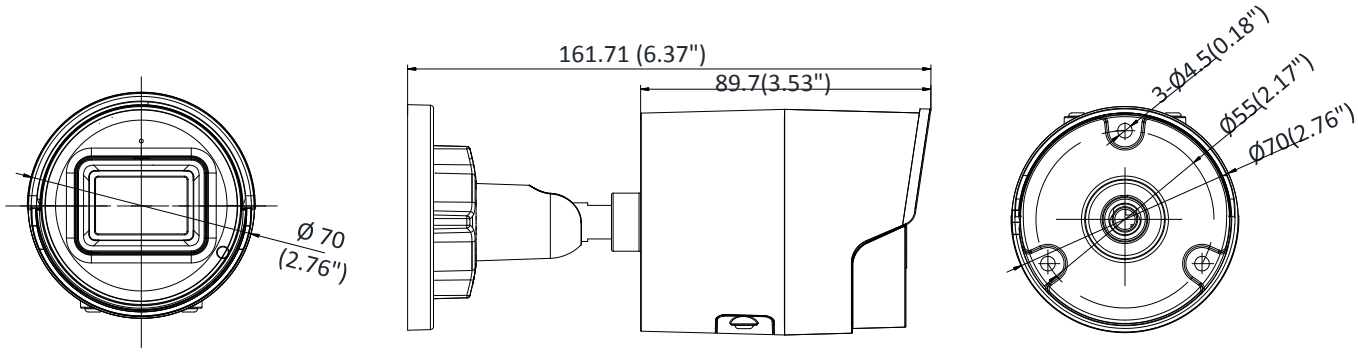

Unit: mm(Inch)

Accessory

DS-1280ZJ-XS

Junction Box

Distributed by

Headquarters
No.555 Qianmo Road, Binjiang District,
Hangzhou 310051, China
T +86-571-8807-5998
overseasbusiness@hikvision.com

Hikvision USA
T +1-909-895-0400
sales.usa@hikvision.com

Hikvision Europe
T +31-23-5542770
sales.eu@hikvision.com

Hikvision UK & Ireland
T +01628-902140
sales.uk@hikvision.com

Hikvision UAE
T +971-4-4432090
salesme@hikvision.com

Hikvision Russia
T +7-495-669-67-99
saleru@hikvision.com

Hikvision Australia
T +61-2-8599-4233
salesau@hikvision.com

Hikvision Italy
T +39-0438-6902
info.it@hikvision.com

Hikvision South Africa
Tel: +27 (10) 0351172
sale.africa@hikvision.com

Hikvision Singapore
T +65-6684-4718
sg@hikvision.com

Hikvision Korea
T +82-(0)31-731-8817
sales.korea@hikvision.com

Hikvision India
T +91-22-28469900
sales@pramahikvision.com

Hikvision Brazil
T +55 11 3318-0050
Latam.support@hikvision.com

Hikvision France
T +33(0)1-85-330-450
info.fr@hikvision.com

Hikvision Spain
T +34-91-737-16-55
info.es@hikvision.com

Hikvision Poland
T +48-22-460-01-50
info.pl@hikvision.com

Hikvision Canada
T +1-866-200-6690
sales.canada@hikvision.com

Hikvision Turkey
T +90 (216)521 7070- 7074
sales.tr@hikvision.com

Hikvision Kazakhstan
T +7-727-9730667
nikia.panfilov@hikvision.ru

Hikvision Tashkent
T +99-87-1238-9438
uzb@hikvision.ru

Hikvision Indonesia
T +62-21-2933759
Sales.Indonesia@hikvision.com

Hikvision Thailand
T +662-275-9949
sales.thailand@hikvision.com

Hikvision Malaysia
T +601-7652-2413
sales.my@hikvision.com

Hikvision Vietnam
T +84-974270888
sales.vt@hikvision.com

Hikvision Hong Kong
T +852-2151-1761
info.hk@hikvision.com

Hikvision Colombia
sales.colombia@hikvision.com

© Hikvision Digital Technology Co., Ltd. 2020 | Data subject to change without notice |

05059820201202