Tiandy

TC-C32KN Spec: I3/Y/WIFI/2.8mm/V4.1

2MP Fixed IR Wi-Fi Dome Camera

Wi-Fi Series

KEY FEATURES

- Metal+Plastic Housing
- Up to 1920x1080@30fps
- S+265/H.265/H.264
- Min. illumination Color: 0.02Lux@F2.0
- Smart IR, IR Range: 30m
- Operating Conditions -40°C~65°C, 0~95% RH
- Built-in Mic, SD Card Slot, Reset Button
- Support Wi-Fi
- IP66, IK10

Tiandy Technologies Co.,Ltd.
Email: sales@tiandy.com Tel: +86-22-58596178
Website: en.tiandy.com Fax: +86-22-58596048

Tiandy

SPECIFICATIONS

Camera	
Image Sensor	1/2.8" CMOS
Signal System	PAL/NTSC
Min. Illumination	Color: 0.02Lux@ (F2.0, AGC ON), B/W: 0Lux with IR
Shutter Time	1s to 1/100,000s
Day & Night	Dual IR Cut Filter with Auto Switch
Wide Dynamic Range	Digital WDR
Angle Adjustment	pan 0~330°, tilt 0~75°, roate 0~350°
Lens	
Lens Type	Fixed
Focus	2.8mm
Lens Mount	M12
Aperture	F2.0, Fixed
FOV	Horizontal field of view: 98.5° Vertical field of view: 55.7°
Illuminator	
IR LEDs	8
IR Range	Up to 30m
Wavelength	850nm
White LEDs	N/A
Compression Standard	
Video Compression	S+265/H.265/H.264
Video Bit Rate	32Kbps~6Mbps
Audio Compression	G.711/G.711U/ADPCM
Audio Bit Rate	8K Hz~48K Hz
Image	
Max. Resolution	1920x1080
Main Stream	PAL: 25fps (1920×1080, 1280×720, 704×576, 640×480)
	NTSC: 30fps (1920×1080, 1280×720, 704×480, 640×480)
Sub Stream	PAL: 25fps (704×576, 704×288, 640×360, 352×288)
	NTSC: 30fps (704×480, 704×240, 640×360, 352×240)
Third Stream	N/A
Image Setting	Saturation, brightness, contrast, sharpness, adjustable by client software or web browser
Image Enhancement	BLC/3D DNR/HLC
ROI	N/A
OSD	16×16, 32×32, adaptable size, Letters Such as Week, Date, Time, Total 1 Regions
Picture Overlay	N/A
Privacy Mask	Yes, 4 regions
Smart Defog	Yes
Feature	
Alarm Trigger	Motion Detection, Mask Alarm, IP Address Conflict
Video Analytics	N/A
Early Warning(EW)	N/A

Tiandy

Network	
Network Storage	Yes(Only Support Tiandy ANR NVR)
Protocols	TCP/IP, HTTP, FTP, DHCP, DNS, DDNS, IPV4, NTP, UDP, ICMP, RTP, RTSP, UPnP
System Compatibility	ONVIF (PROFILE S/T/G), SDK, P2P(Mutually exclusive with Profile G)
Remote Connection	≤2
Client	Easy7, EasyLive Plus
Web	IE10+;Firefox52+;Edge89+;Safari11+;Chrome57+
Wi-Fi	
Wireless Standards	IEEE802.11b/g/n
Frequency Range	2.4GHz ~ 2.4835 GHz
Channel Bandwidth	20/40MHz
Protocols	802.11b: CCK, QPSK, BPSK 802.11g/n: OFDM/HT
Security	WPA-PSK/WPA2-PSK
Transfer Rates	802.11b: 11Mbps 802.11g: 54Mbps 802.11n: up to 150Mbps
Wireless Range	Up to 50m (The performance varies based on actual environment)
Power Consumption	802.11b: 17±1.5dBm@11Mbps 802.11g: 14±1.5dBm@54Mbps 802.11n: 12.5±1.5dBm@150Mbps
Interface	
Communication Interface	1 RJ45 10M/ 100M self adaptive Ethernet port
Audio I/O	Mic in
Alarm I/O	N/A
Reset Button	Yes
On-board storage	Built-in MicroSD card slot, up to 512 GB
General	
Operating Conditions	-40°C~65°C, 0～95% RH
Web Client Language	19 languages Simple Chinese/Traditional Chinese/English/Spanish/Korean/Italian/Turkish/Russian/Thai/French/Polish/Dutch/Hebrew/Arabic/Vietnamese/German/Ukrainian/Portuguese/Albanian
Power Supply	DC12V±25%
Power Consumption	MAX: 6W (12V)
Protection	Surge protection 2000V;Lightning proof 6000V;IP66;IK10
Heater	N/A
Dimensions	Φ120×90mm (Φ4.72×3.54 inch)
Weight	0.41Kg

* Listed resolutions are only selectable options. It does not mean that all streams can work at their maximum resolution at the same time.

AVAILABLE MODEL

TC-C32KN SPEC: I3/Y/WIFI/2.8MM/V4.1

Tiandy

DIMENSIONS (Unit: mm)

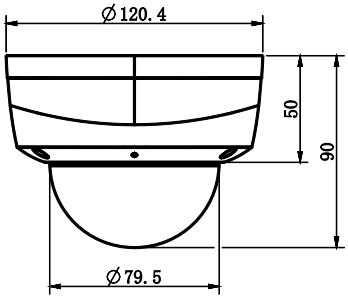

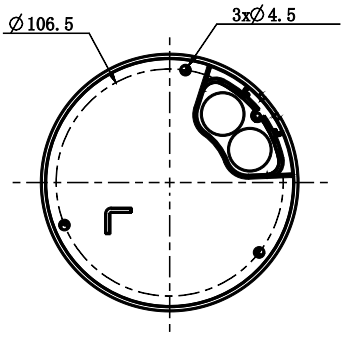

ACCESSORIES

A36
Pole Mount

A35
Corner Mount

811
Junction Box

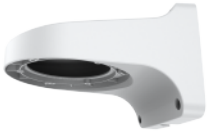

A29
Wall Mount

A25
Corner/Pole Mount

A20
Pendant Mount

DISTRIBUTED BY

Tiandy Technologies Co.,Ltd.
Email: sales@tiandy.com Tel: +86-22-58596178
Website: en.tiandy.com Fax: +86-22-58596048