Tiandy

Network Video Camera Series Product

User Manual

ISO 9001:2008
ISO 14001:2004

Tiandy Technologies Co., Ltd
Address: No.8, Huake Rd2, Binhai Hi-Tech Industry Park (Huayuan), Tianjin 300384, China
TEL:+86-22-58596178
FAX:+86-22-58596001
E-mail:technical@tiandy.com
Website:http://en.tiandy.com/

Statement

- The Company has the right to update the contents of this Manual according to the enhancements and changes of product functions, and periodically improve the software and hardware products described in this Manual. Updated information may be reflected in the latest version of this Manual without prior notice.
- Product parameters may change because of continuously using new technologies without prior notice.
- This Manual is only used for providing reference and guidance for customers. It is not guaranteed to be completely consistent with the actual product, and the actual product may prevail during practical application.
- The information on the texts, forms and pictures in this Manual are protected by relevant national laws, and it shall not be used without permission.
- All the copyright and final interpretation right of this manual belong to our company.

Contents

1 PRECAUTIONS 6

2 PRODUCT OVERVIEW 8

2.1 DIMENSIONS 9

2.1.1. HD Network IR Integrated Machine (MINI) 9

2.1.2. HD Network IR Integrated Machine (MINI) 12

2.1.3. HD Network IR Dome Camera 12

2.1.4. HD Network IR Dome Camera (MINI) 14

2.1.5. HD Network Safe (Non-) IR Dome Camera 15

2.1.6. HD Network Gun Camera 16

2.1.7. HD Network Zoom IR Gun Camera 17

2.1.8. Dimensions of HD Network Zoom （Non-)IR Dome Camera 20

2.1.9. HD network zoom IR conch camera 21

2.1.10. HD Network Special-shaped Safe IR Dome Camera 21

3 INSTALLATION INSTRUCTIONS 22

3.1 PREPARATION FOR INSTALLATION 22

3.2 INSTALLATION METHODS 23

3.2.1. HD Network IR Integrated Machine (MINI) 23

3.2.2. HD Network IR Integrated Machine (MINI) 24

3.2.3. HD Network IR Dome Camera 26

3.2.4. HD Network IR Dome Camera (MINI) 28

3.2.5. HD Network Safe (Non-) IR Dome Camera 29

3.2.6. HD Network Gun Camera 31

3.2.7. HD Network Zoom IR Gun Camera 32

3.2.8. Dimensions of HD Network Zoom （Non-)IR Dome Camera 34

3.2.9. HD Network Special-shaped Safe IR Dome Camera 36

3.3 WATERPROOF CONSTRUCTION SPECIFICATIONS 37

4 INTERFACE DESCRIPTION 39

4.1 CAMERA TAIL CABLE INTERFACE DESCRIPTION 39

4.2 HD NETWORK ZOOM IR GUN CAMERA 45

4.3 DIMENSIONS OF HD NETWORK ZOOM （NON-)IR DOME CAMERA 47

4.4 NETWORK GUN CAMERA SERIES 49

4.4.1. Network Gun Camera-V2.0 49

4.4.2. Network Gun Camera-V3.0 52

5 WEB CLIENT 54

5.1 OPERATING ENVIRONMENT 54

5.2 IE SETTINGS 54

5.3 LOGIN DEVICE 56

5.4 LIVE VIEW INTERFACE 61
5.5 PLAYBACK 69
5.6 LOG 71
5.7 CONFIGURATION 72
5.7.1. Basic Set 73
5.8 AUDIO VIDEO SET 75
5.8.1. Stream 75
5.8.2. Audio 79
5.8.3. Image Setting 80
5.8.4. OSD 85
5.9 NETWORK 88
5.9.1. Basic set 88
5.9.2. Advanced Set 91
5.9.3. Safety management 101
5.10 HUMAN BODY TEMPERATURE MEASUREMENT SETTING 102
5.10.1. Human body temperature measurement setting 102
5.10.2. Alarm on unacceptable body temp. 104
5.10.3. Black body abnormal alarm 107
5.10.4. Normal body temperature linkage 108
5.11 EVENT SCHEDULE 110
5.11.1. Event Management 110
5.11.2. Event Server 114
5.12 VCA/SMART SURVEILLANCE 115
5.12.1. Algorithm Configuration 115
5.12.2. Create Rule 116
5.12.3. Shield Area 128
5.12.4. Advance Params 129
5.12.5. Statistical report 129
5.12.6. Online VCA Log 131
5.13 CAPTURE FACIAL IMAGES 131
5.13.1. Face Configuration 131
5.13.2. Snapshot parameters 134
5.13.3. Advance Params 139
5.13.4. Statistical report 139
5.14 FACE RECOGNITION 141
5.14.1. Face Library 141
5.14.2. Face Configuration 144
5.14.3. Snapshot parameters 146
5.14.4. Statistical report 146
5.15 STORAGE 146
5.15.1. Schedule Recording 146
5.15.2. Snapshot 148
5.15.3. Disk management 149
5.15.4. NFS 150

5.16 SYSTEM 155
5.16.1. System 155
5.16.2. Users 158
5.16.3. Maintenance 159
5.16.4. Local PC Settings 162
5.17 EW 163

6 SIMPLE TROUBLESHOOTING 166

6.1 SYSTEM FAILURE 166
6.2 NETWORK FAILURE 166
6.3 OPERATION FAILURE 168
6.4 CONTROL FAILURE 169
6.5 VIDEO FAILURE 169
6.6 AUDIO FAILURE 170
6.7 ALARM FAILURE 171
6.8 PARAMETERS DOES NOT TAKE EFFECT AFTER SETTINGS 171
6.9 OTHERS 171

7 AFTER-SALES SERVICES 172

APPENDIX I :LIGHTNING PROTECTION AND SURGE PROTECTION 173

APPENDIX 2: DEFAULT PARAMETERS AND RECOMMENDED CONFIGURATION 175

1 Precautions

Welcome you to purchase our network camera, and please contact the dealer or our after-sales service personnel in case of any questions during use.

The purpose of this Manual is to ensure that users can operate the products properly, thus avoiding danger or property damage. Please read this Manual carefully and keep it properly for future reference before using the products.

The personnel responsible for the installation and routine maintenance of the equipment must have basic skills for safe operation. Please follow the safety specifications specified in the product manual during the operation of the equipment.

As shown below, the precautionary measures are divided into two parts: “Warning” and “Note”:

Warning: Alert users to prevent the potential danger of death or serious injury	Note: Alert users to prevent the potential danger of injury or property damage

Warning:

（1） Please use a power adapter that meets the requirements of SELV (Safety Extra Low Voltage) and meets the Limited Power Source specified in IEC60950-1. Refer to the list of product parameters for the specific parameters of power adapter.

（2） Do not disassemble or modify the equipment in any way. The problems caused due to unauthorized disassembly or modification are not covered by the warranty, and the Company is not responsible for all problems arising from this, please contact the dealer or the latest service center in case the equipment is unable to work properly.

（3） To reduce the risk of fire or electric shock, do not expose indoor products to rain or moisture.

（4） Installation shall be performed by professional service personnel in accordance with local regulations.

（5） User-friendly power-off equipment shall be connected in series during the installation and wiring of building.

（6） Ensure that the connection can bear the weight at least 4 times the weight of the product before installing the equipment on a wall or ceiling.

（7） Do not directly touch the heat-dissipating parts of the integrated machine, to prevent burns.

Note:

（1） Prevent operations that may cause damage to products during the transportation and storage, such as heavy pressure, severe vibration and immersion.

（2） Please check whether the power supply is correct before powering on the camera.

（3） Do not directly touch the image sensor with any object, and wipe off the dirt with a lens tissue or eyeglass cloth slightly wet with alcohol if necessary, and do not give it a vigorous wipe to prevent scratching.

（4） Please prevent pointing the lens directly at strong light (such as lighting, sunlight, etc.), otherwise, over-brightness or glare (this is not a failure of camera) may be caused, and the service life of image sensor may be affected.

（5） Laser beam may burn the image sensor. When laser device is used, please be careful not to expose the surface of image sensor to the laser beam.

（6） Do not place it in humid, dusty, extremely hot or cold, or strong electromagnetic radiation places.

(7) Equipment storage environment is suggested to be -35℃~65℃ and humidity is suggested to be smaller than 95% (no coagulation).

（8） Please ensure a sufficient distance between the installation location and surrounding electromagnetic sensitive equipment, to prevent possible electromagnetic interference.

（9） Avoid heat accumulation and keep the surroundings of camera well ventilated.

（10） Do not allow water or any liquid to flow into the equipment during use.

（11） Products shall be provided with original packaging of the factory when being delivered or returned to the factory, otherwise, the damage to the network camera during transportation is not covered by the warranty.

（12） Accessories or products may be used abnormally due to the improper replacement of battery, so users are not recommended to replace them directly; please the battery recommended by the manufacturer (suitable for the equipment with a battery) if necessary.

（13） After logging in for the first time, be sure to change the default login password, thus avoiding loss due to weak passwords.

（14） The interfaces of the equipment supporting USB, SD card or micro SD card interfaces do not support hot plugging, please power off the equipment before plugging or unplugging; otherwise, the equipment may be damaged.

（15） The camera setting interface and menu contents of different models are not identical. Please refer to the actual interface. If you have any questions, please consult the dealer or our after-sales service.

2 Product Overview

This series of webcam products adopt high-sensitivity sensor and advanced circuit design, aiming to provide super high quality, powerful and reliable audio and video monitoring solutions, which are suitable for security applications requiring high-performance cameras. The network camera adopts High performance, single chip SOC chip to realize audio and video collection, compression and transmission; the standard H.265 and H.264 high profile, and main profile encoding algorithm, ensures a clearer and smoother video transmission effect; the embedded web server allows users to easily realize real-time monitoring and remote control of front-end cameras through IE browser (the default IP address is 192.168.1.2, user name admin, password admin). Products with wide dynamic, strong light suppression, intelligent analysis, ultra-low illumination, IR enhancement and other features, can be applied to finance, telecommunications, supermarkets, hotels, governments, schools, airports, factories, public security, judicial and other places requiring ultra-high-definition image quality.

2.1 Dimensions

2.1.1. HD Network IR Integrated Machine (MINI)

(Unit: mm)

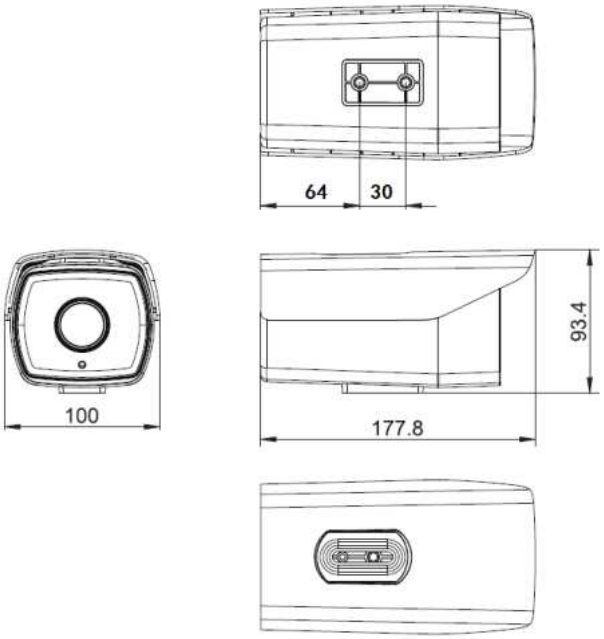

Dimensions of HD Network IR Integrated Machine - V2.0

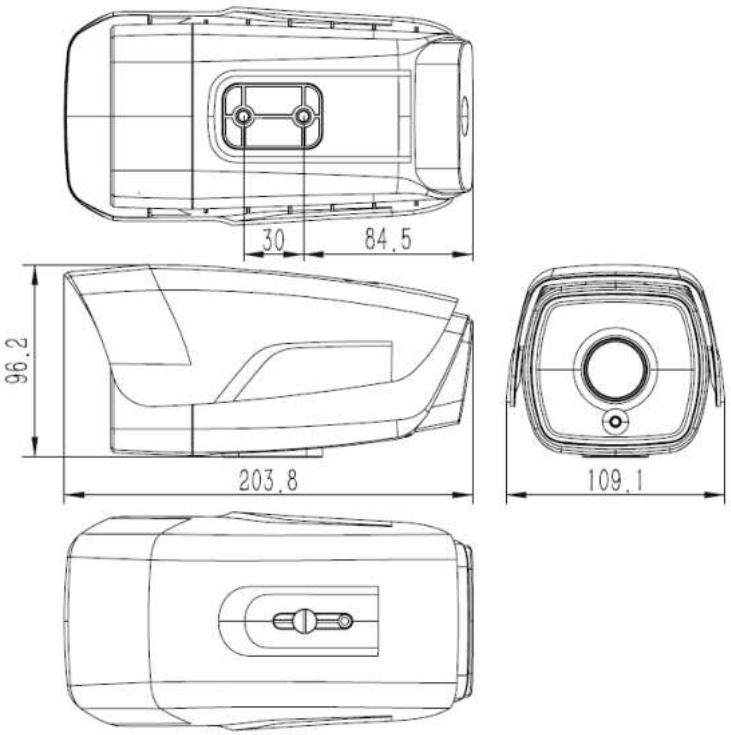

Dimensions of HD Network IR Integrated Machine - V3.0

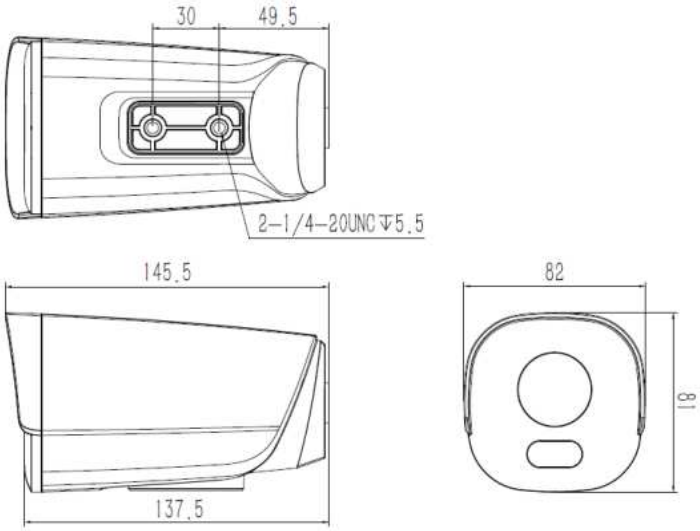

Dimensions of HD Network IR Integrated Machine - V4.0 (without integrated support)

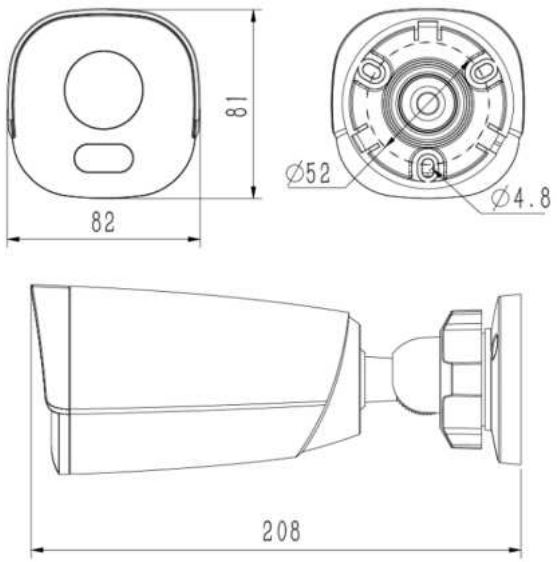

Dimensions of HD Network IR Integrated Machine - V4.0 (with integrated support)

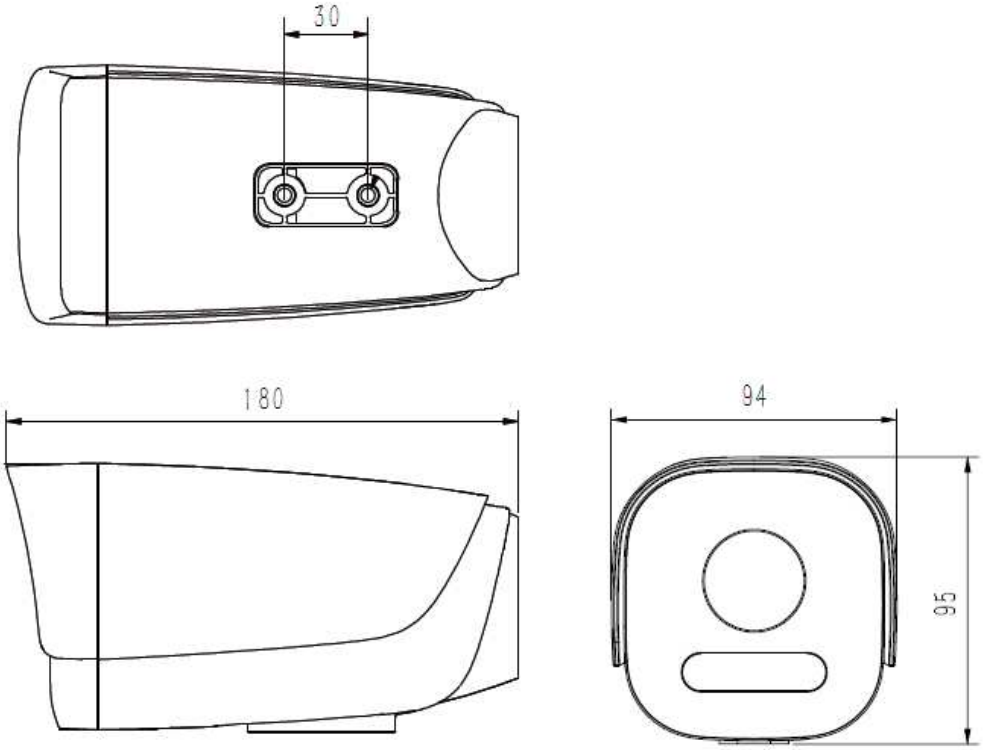

Dimensions of HD Network IR Integrated Machine - V5.0

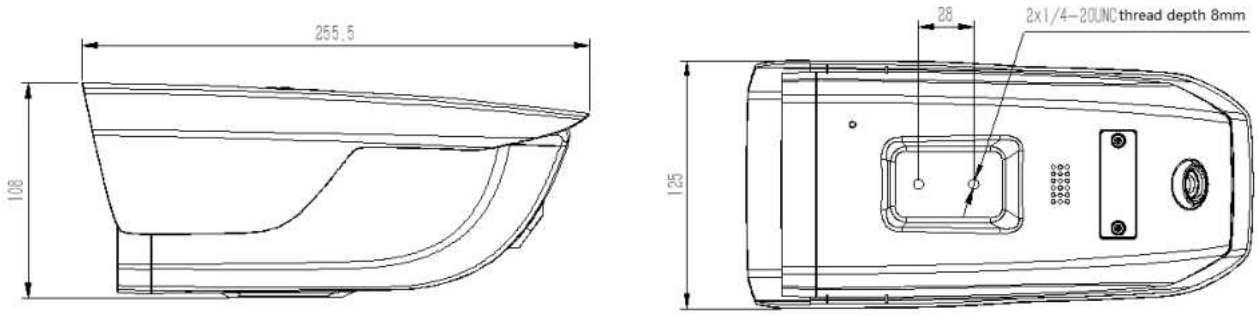

Dimensions of HD Network IR Integrated Machine - Appearance two

2.1.2. HD Network IR Integrated Machine (MINI)

(Unit: mm)

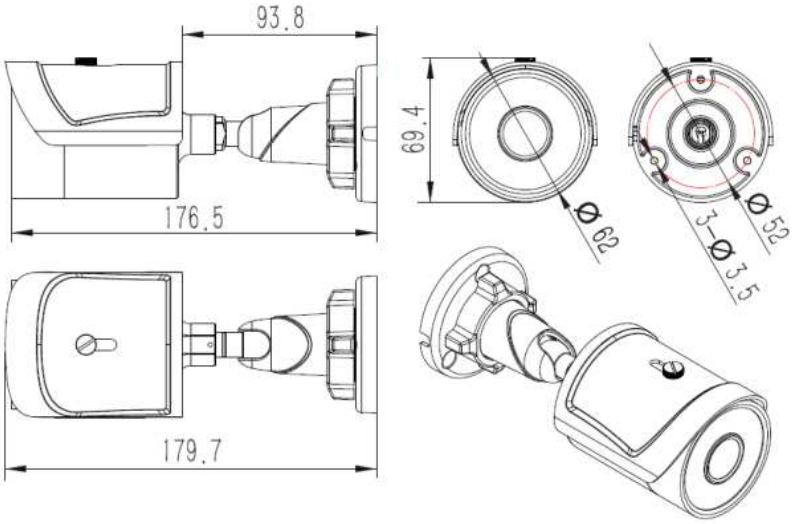

Dimensions of HD Network IR Integrated Machine (MINI)- V1.0

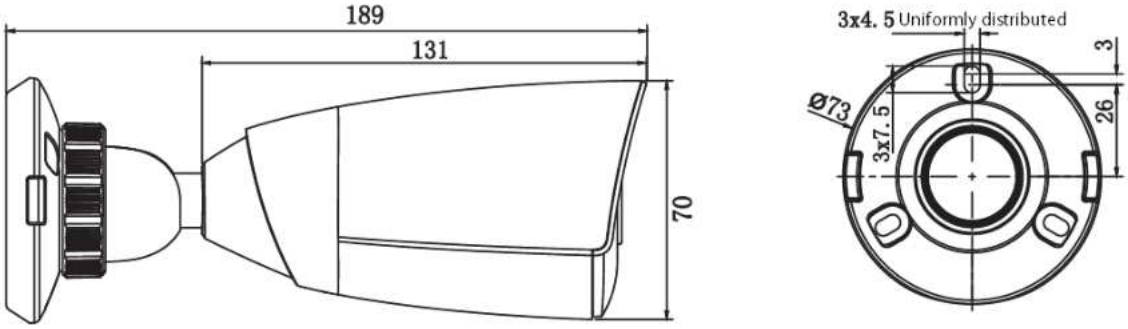

Dimensions of HD Network IR Integrated Machine (MINI)- V2.0

2.1.3. HD Network IR Dome Camera

(Unit: mm)

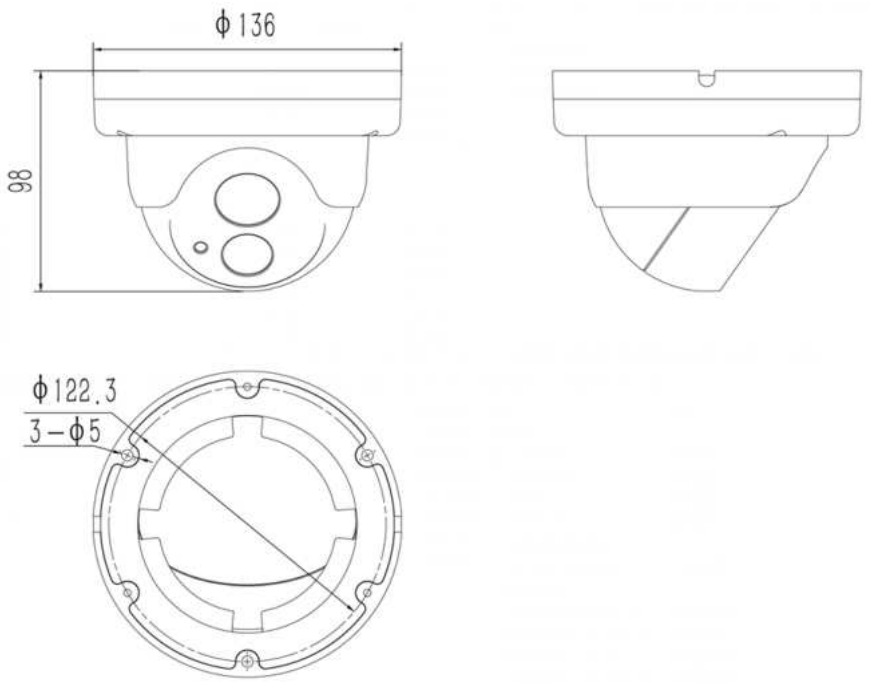

Dimensions of HD Network IR Dome Camera - V2.0

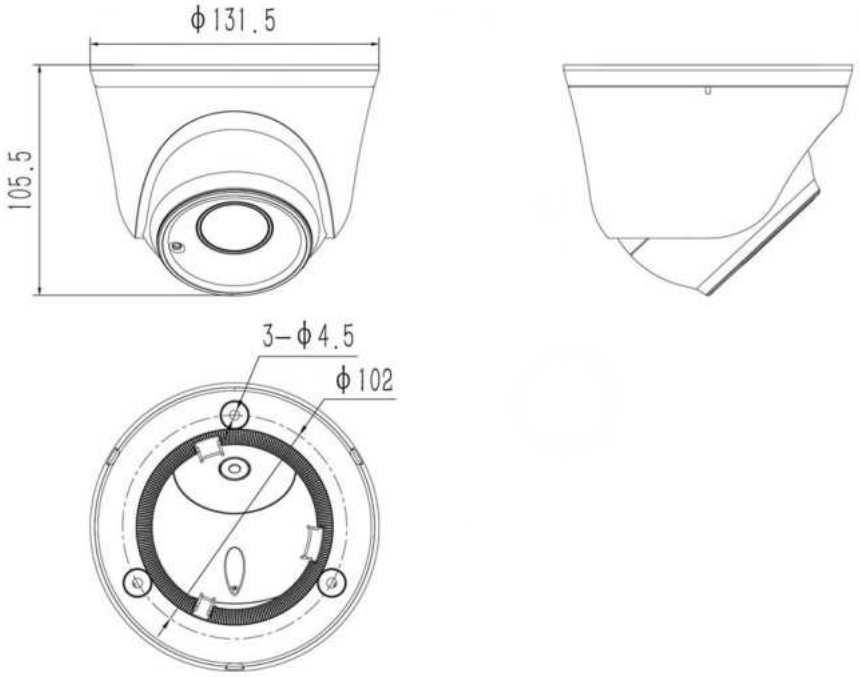

Dimensions of HD Network IR Dome Camera - V3.0

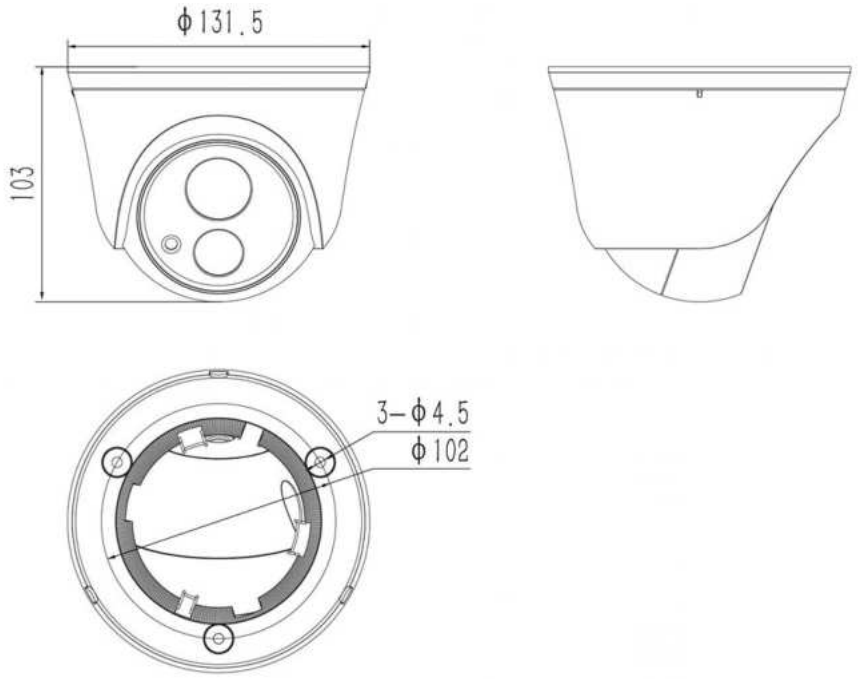

Dimensions of HD Network IR Dome Camera - V4.0

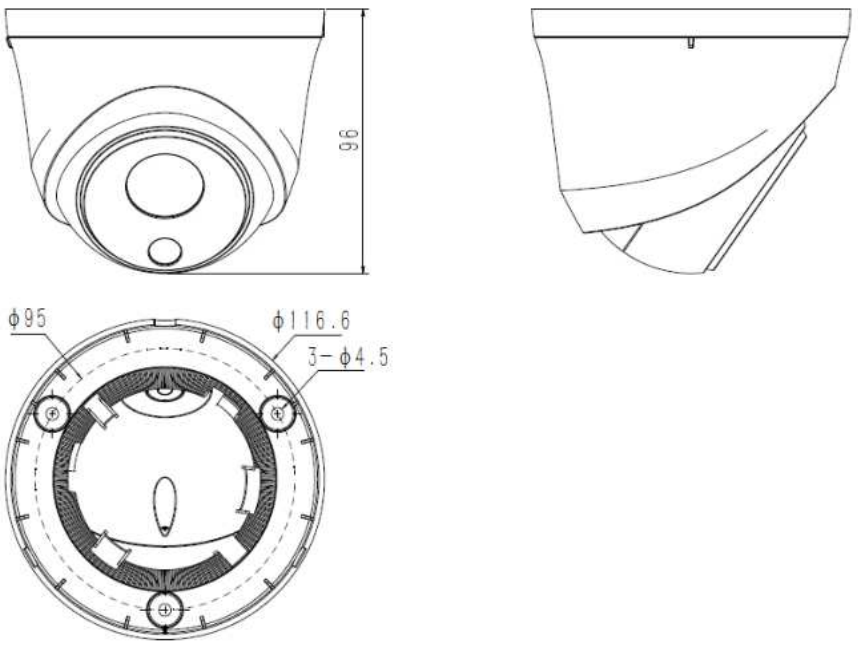

Dimensions of HD Network IR Dome Camera - V5.0

2.1.4. HD Network IR Dome Camera (MINI)

(Unit: mm)

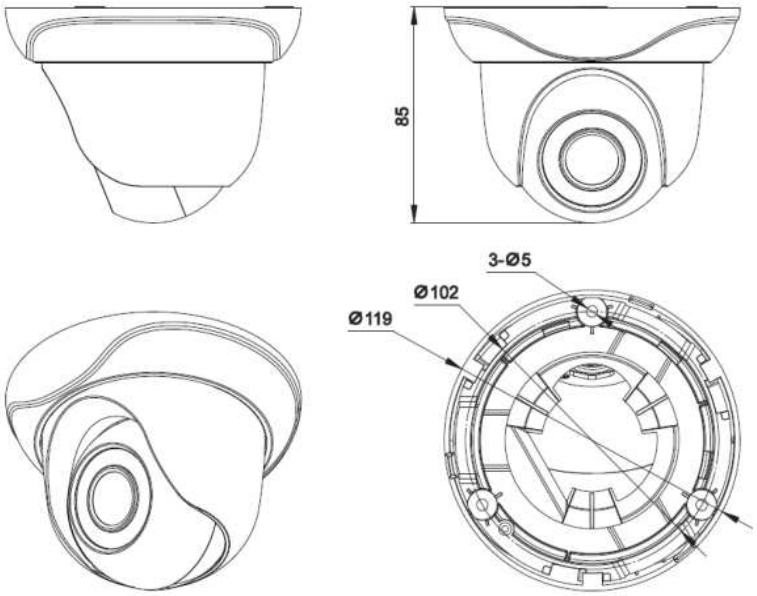

Dimensions of HD Network IR Dome Camera (MINI)

2.1.5. HD Network Safe (Non-) IR Dome Camera

(Unit: mm)

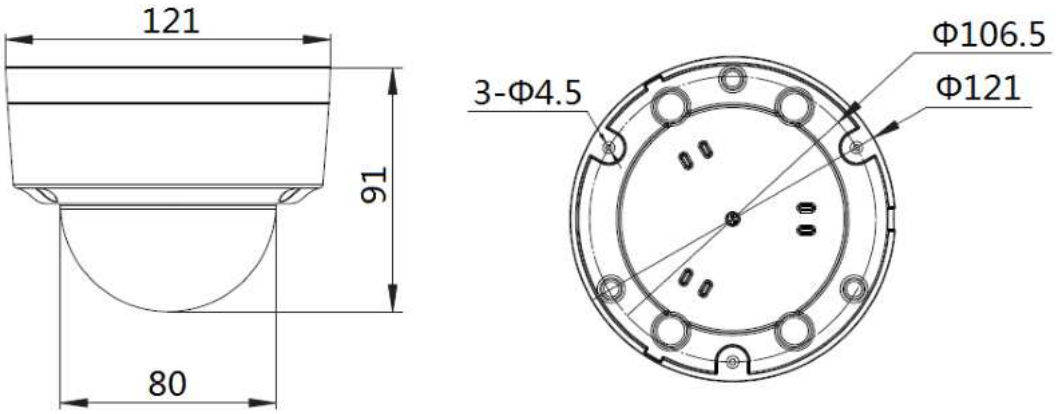

Dimensions of HD Network Safe (Non-) IR Dome Camera - V1.0

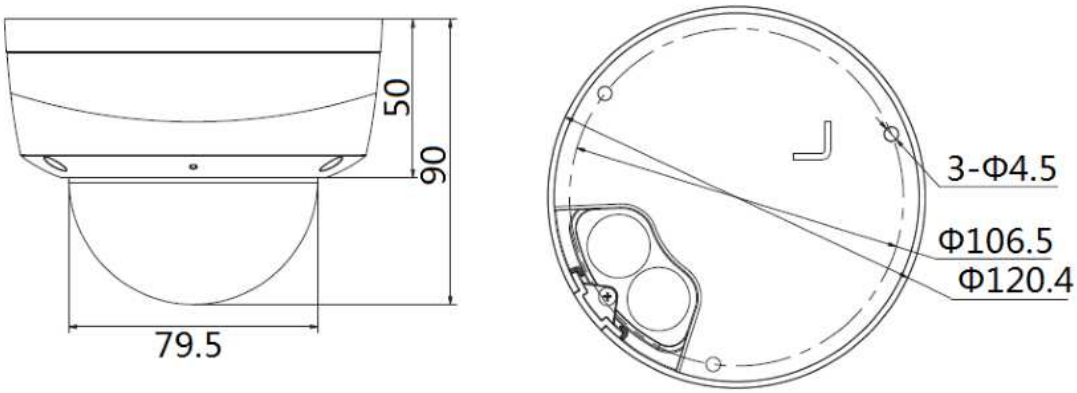

Dimensions of HD Network Safe (Non-) IR Dome Camera - V2.0

2.1.6. HD Network Gun Camera

(Unit: mm)

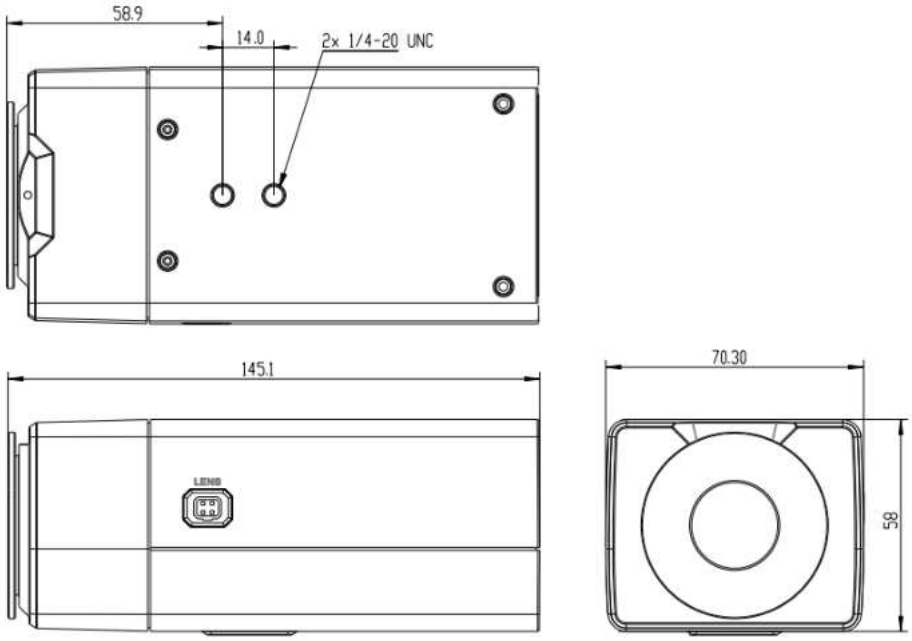

Dimensions of HD Network Gun Camera - V1.0/V2.0

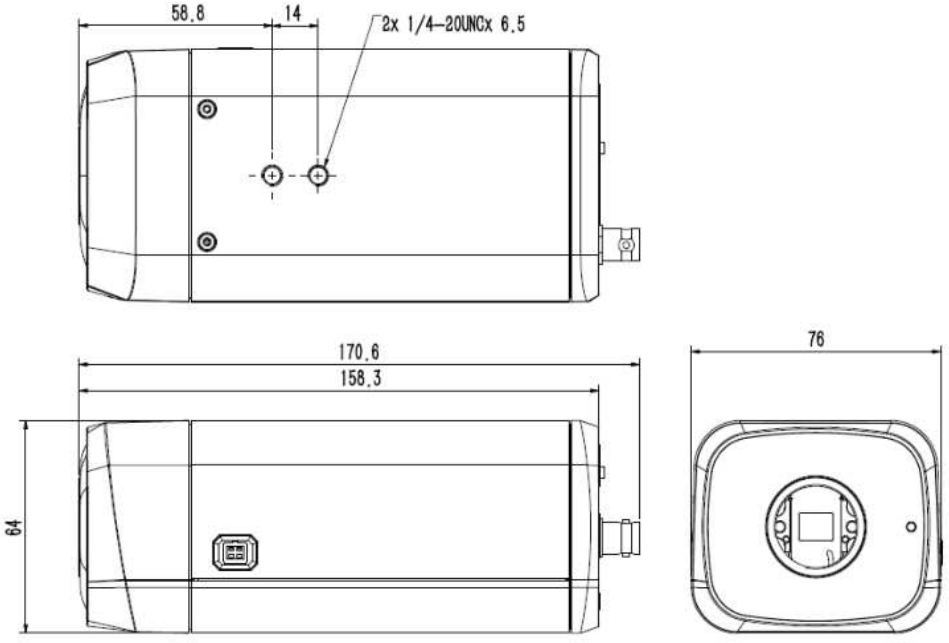

Dimensions of HD Network Gun Camera - V3.0

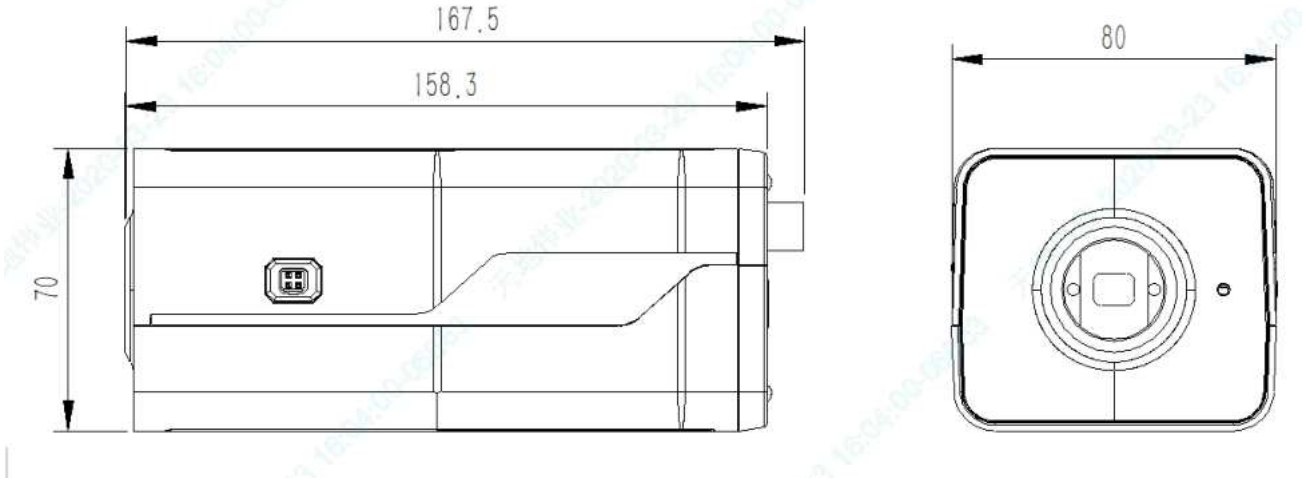

Dimensions of HD Network Gun Camera -Appearance two

2.1.7. HD Network Zoom IR Gun Camera

(Unit: mm)

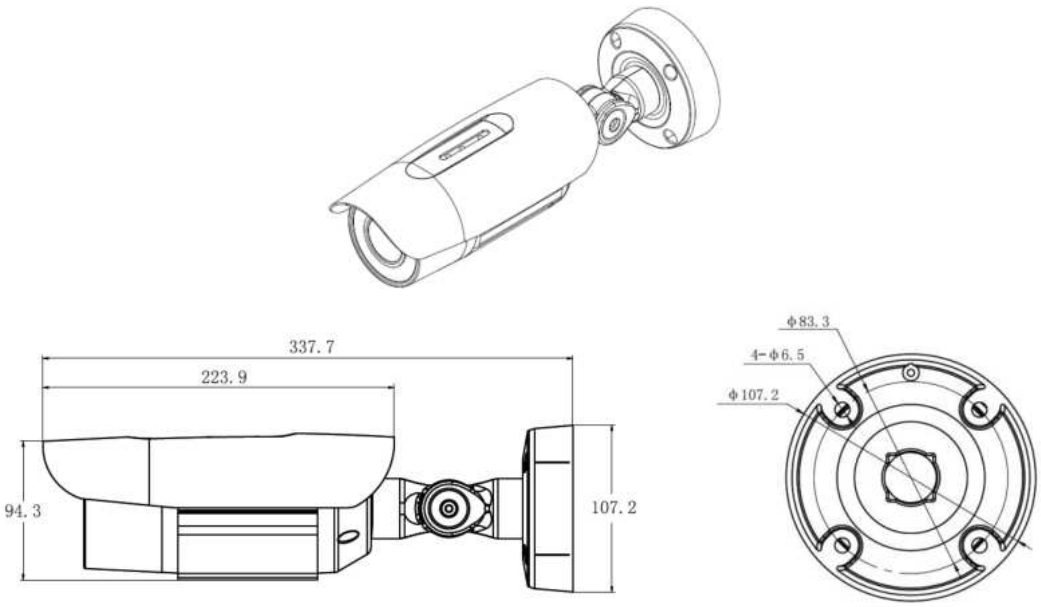

Dimensions of HD Network Zoom IR Gun Camera (with integrated support)

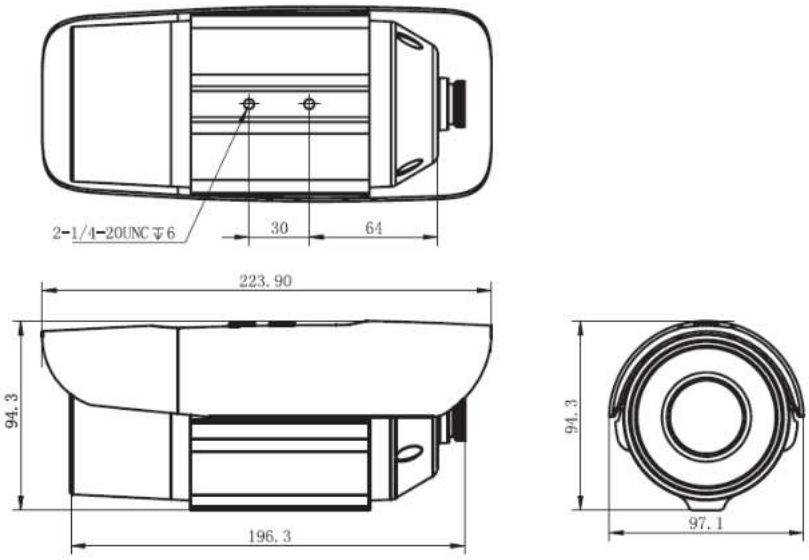

Dimensions of HD Network Zoom IR Gun Camera (without integrated support)

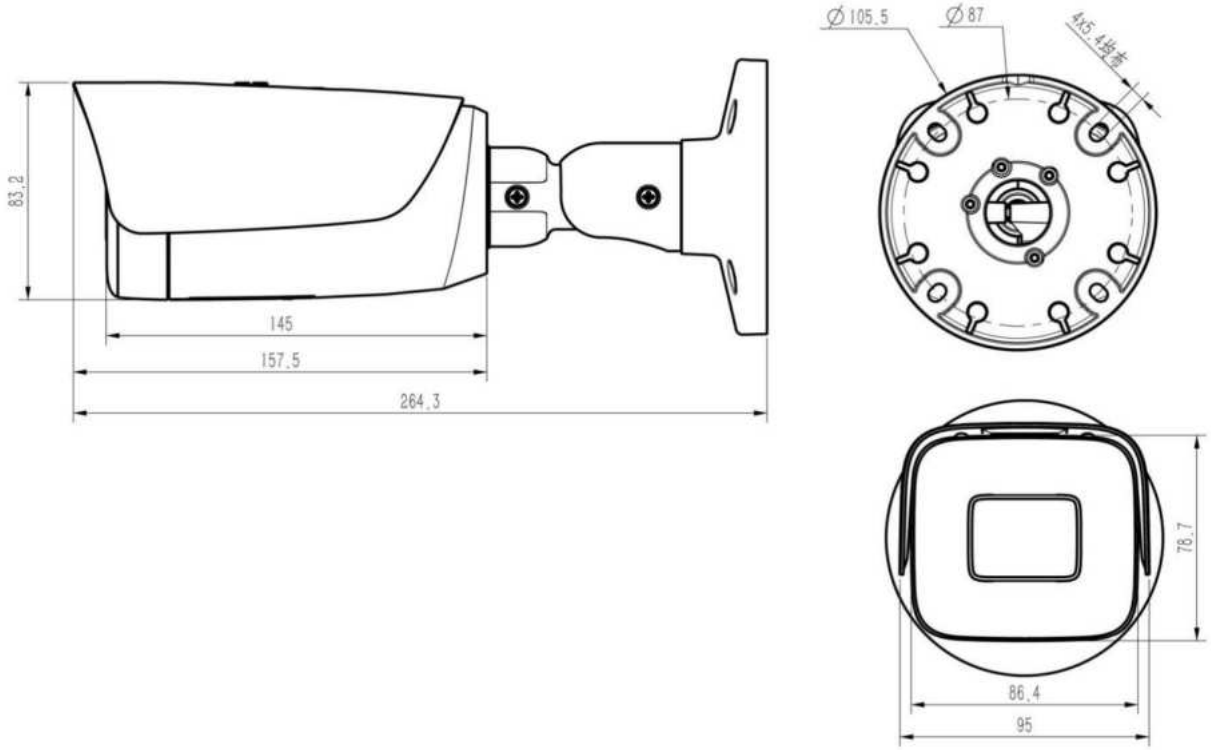

Appearance and dimension of high definition network zoom IR gun camera V4

2.1.8. Dimensions of HD Network Zoom （Non-)IR Dome Camera

(Unit: mm)

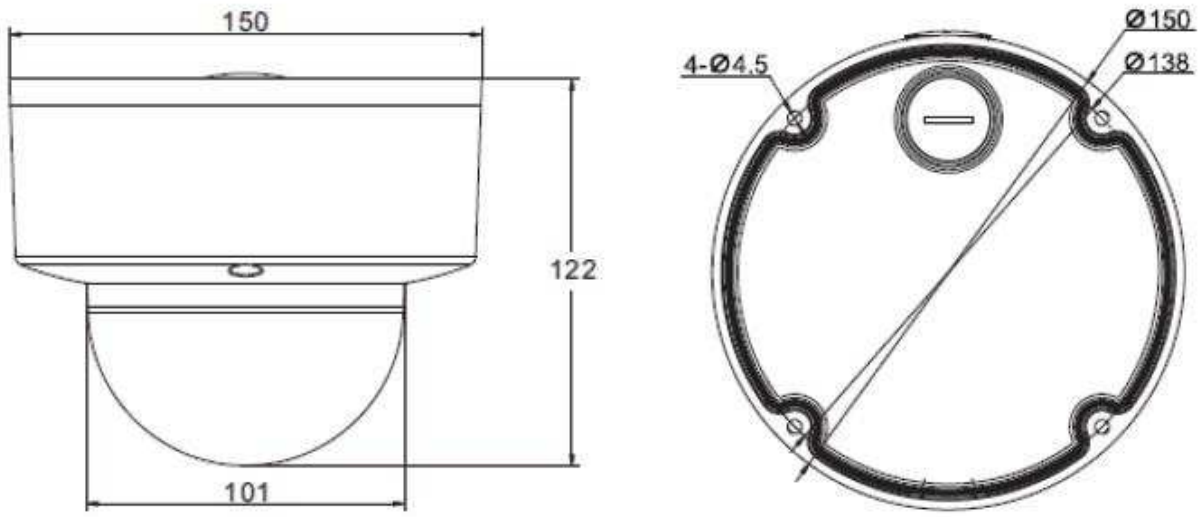

Dimensions of HD Network Zoom (non-)IR Dome Camera - V2.0

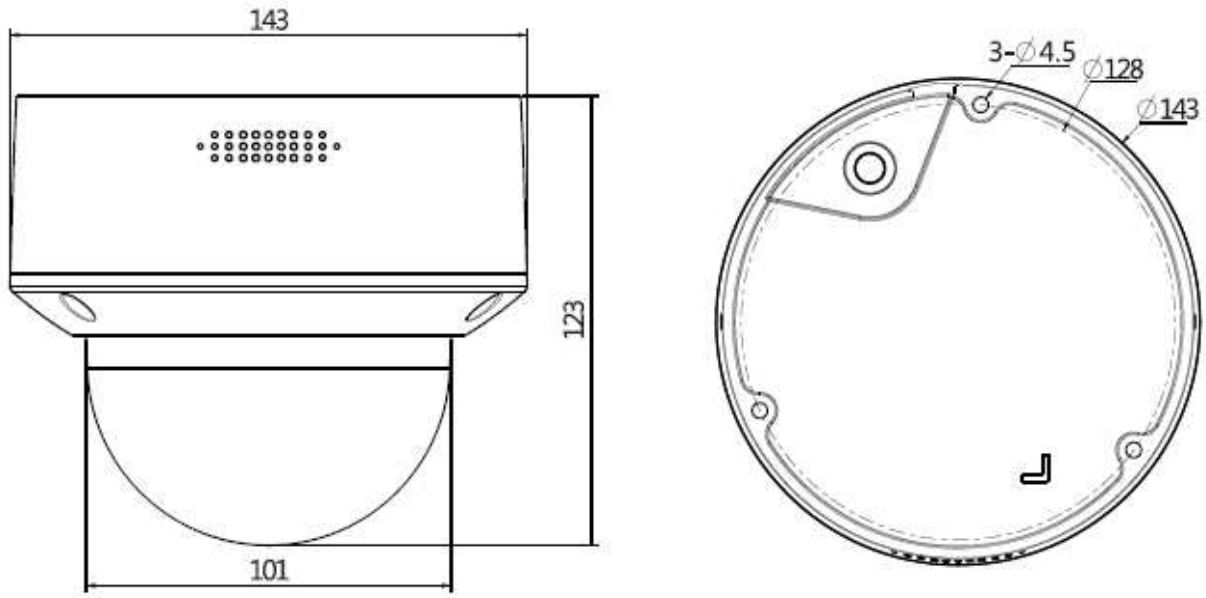

Dimensions of HD Network Zoom (non-)IR Dome Camera - V3.0

2.1.9. HD network zoom IR conch camera

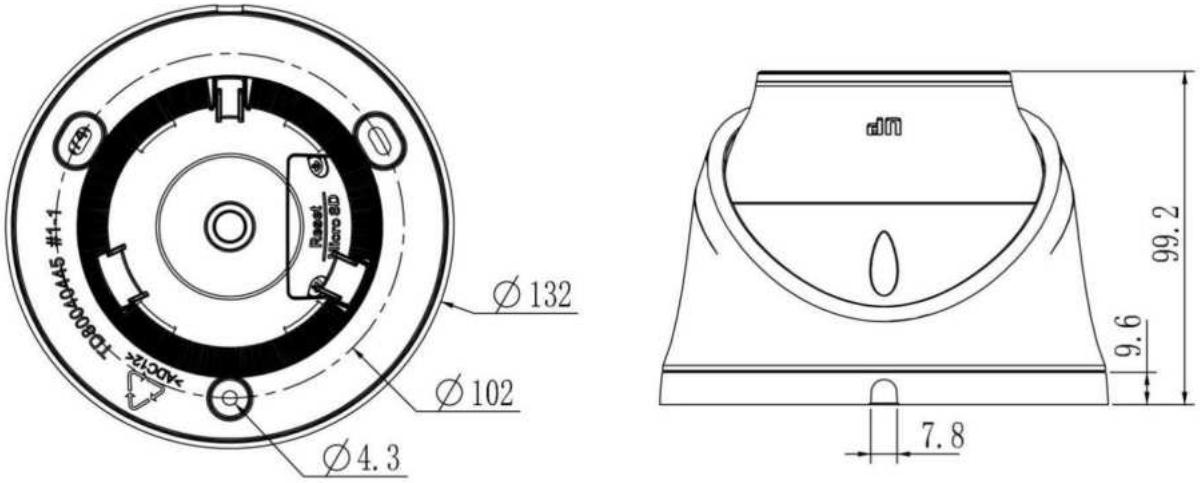

HD network zoom IR conch camera v1.0 appearance size

2.1.10. HD Network Special-shaped Safe IR Dome Camera

(Unit: mm)

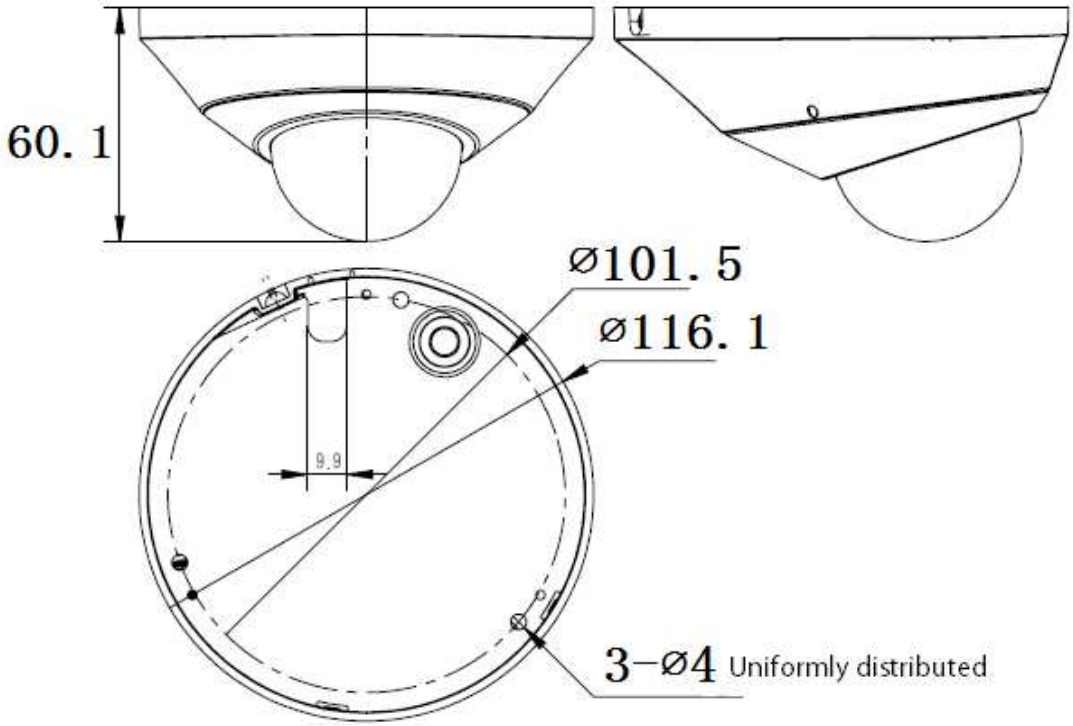

Dimensions of HD Network Special-shaped Safe IR Dome Camera

3 Installation Instructions

3.1 Preparation for Installation

(1) Basic requirements

Ensure that all electrical work must be conducted in accordance with the latest electrical regulations, fire regulations and related regulations; check whether the packaging is damaged, equipment and accessories are complete, and determine whether the application places and installation methods of network camera product meet the requirements; please contact the dealer if necessary, please use the product according to the requirements of the working environment.

(2) Common installation tools:

Prepare the tools actually required according to the actual situations

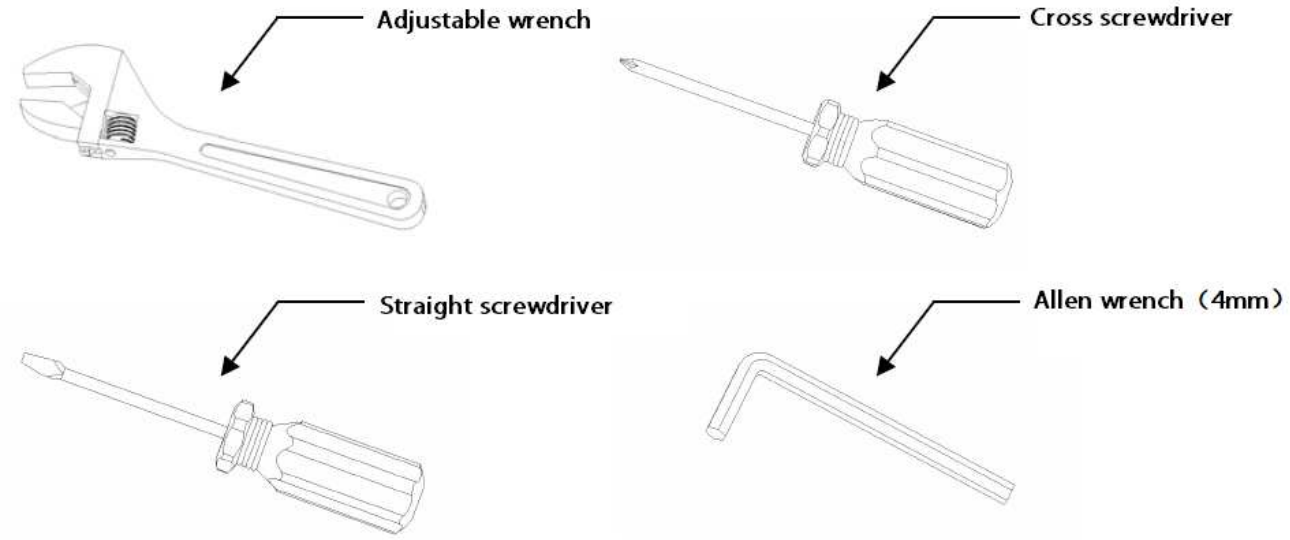

Common installation tools

(3) Check the strength of the construction of installation space and installation site

Confirm that there is enough space at the installation site to accommodate the product and its mounting structural part. Confirm that the carrying capacity of the ceiling, wall and bracket on which the network camera is installed must be able to support the total weight of network camera and its mounting structural part, with a 4 times of safety factor.

Please keep all packaging materials of network camera

After unpacking the network camera, please keep the original packaging materials of network

camera properly, and pack the network camera product properly using the packaging materials of network camera and return it to the supplier for handling in case of any problem.

Note: Non-original packaging materials may cause accidental damage during transportation.

3.2 Installation Methods

3.2.1. HD Network IR Integrated Machine (MINI)

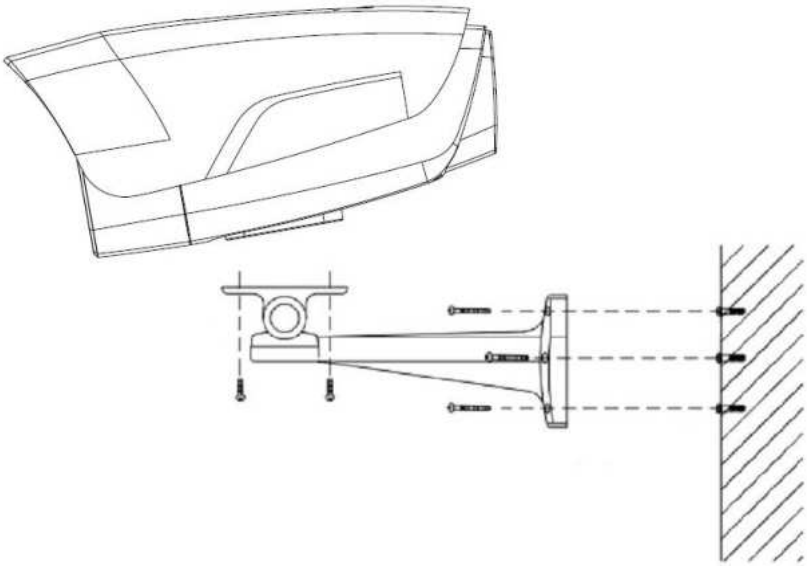

Installation diagram of HD network IR integrated machine

Steps:

1. Mark the positions of holes for mounting camera on the wall using an ink pen.
2. Make holes on the marked positions using an electric drill.
3. Drive the expansion rubber plug into the hole.
4. Fasten the wall mounting bracket on the wall with screws.
5. Take out the camera in the packaging box, and fasten the camera on the universal joint of bracket with screws.
6. Adjust the universal joint of bracket to a proper position and then tighten the screws.
7. Finally, remove the protective film on the IR anti-reflection plate (some models are provided with IR anti-reflection plates, please clean the cleaning of the IR anti-reflection plate, to avoid oil stains and scratches).

Note:

(1) Brackets must be purchased separately.

(2) The mounting hole of camera is 5.5mm deep. Do not use excessively long screws.

(3) The mounting surface of camera must have sufficient bearing capacity.

3.2.2. HD Network IR Integrated Machine (MINI)

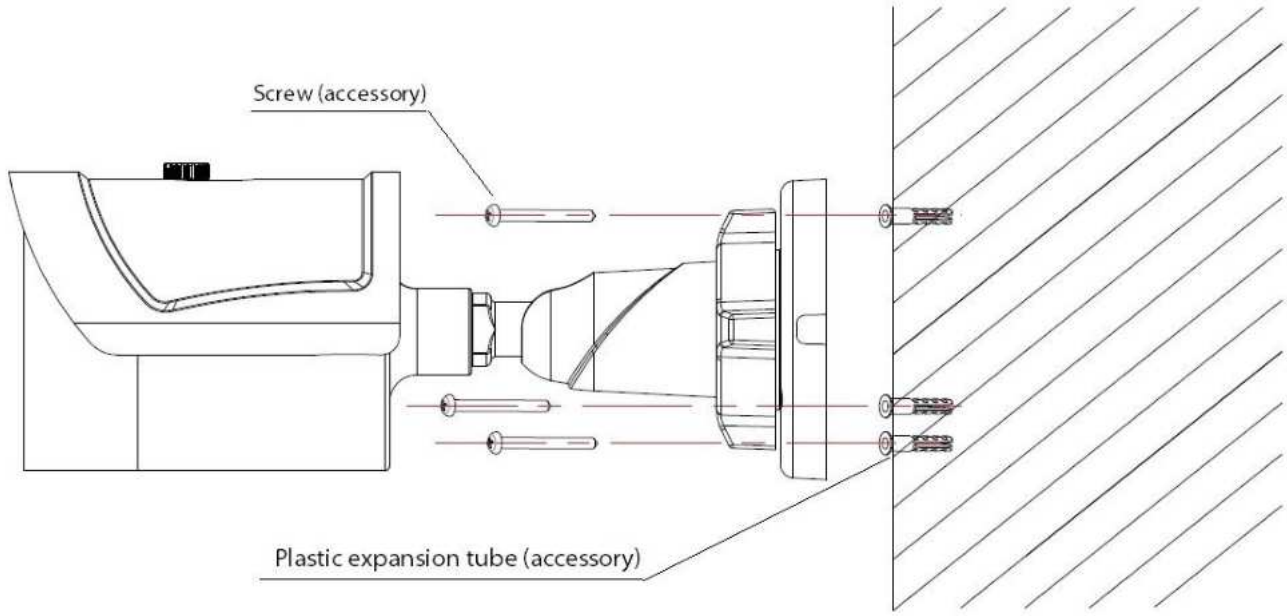

Installation Diagram of HD Network IR Integrated Machine (MINI) -V1.0

Steps:

1. Mark the positions of holes for mounting camera on the wall using an ink pen.

2. Make holes on the marked positions using an electric drill.

3. Drive the expansion rubber plug into the hole that has just been made.

4. Take out the camera in the packaging box and fasten the wall mounting bracket on the wall with 3 screws.

5. Adjust the universal joint of bracket to the proper position.

Note: The mounting surface of camera must have sufficient bearing capacity.

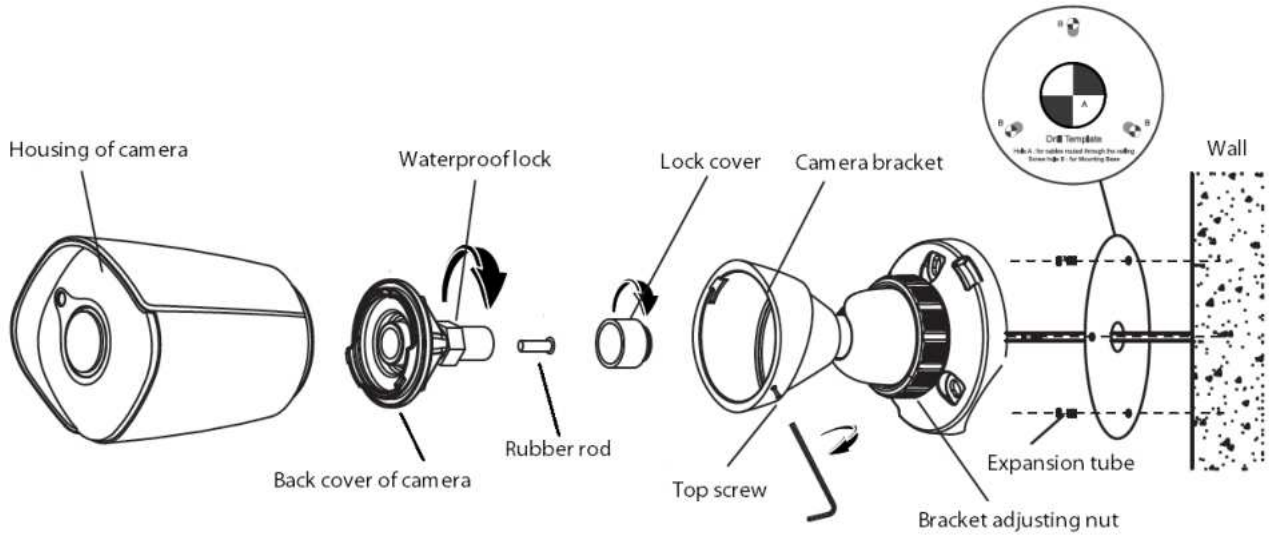

Installation Diagram of HD Network IR Integrated Machine (MINI) -V2.0

Steps:

1. Unscrew the top screw and remove the camera bracket. Unscrew the back cover of camera according to the mark, unscrew the waterproof lock on the back cover, and take out the rubber rod.

2. Paste the positioning stickers (accessories) on the wall where the camera needs to be installed, drill holes according to hole position B, and then drive the expansion tube (accessory) into the hole. Hole position A is the outlet hole. If necessary, drill holes according to the hole position. Pass the network cable through the camera bracket, and then fasten the bracket on the wall with 3 self-tapping screws (accessories). Pass the network cable through the waterproof lock and the back cover of camera.

3. Equip the network cable that has passed through the wire lock with RJ-45 terminal and power terminal.

If the camera is powered by means of POE, the wiring method of RJ-45 is as follows:

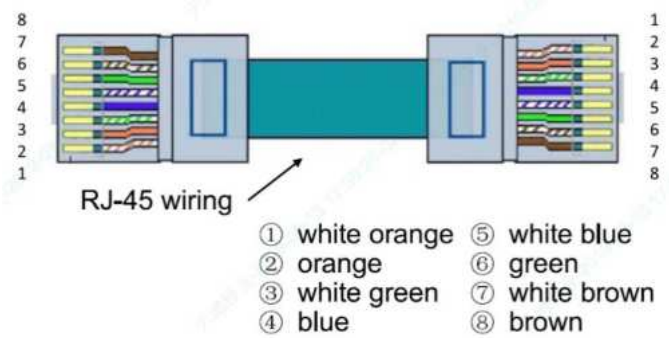

POE power supply-wire sequence diagram

If the camera is powered by means of non-POE, the wiring method of RJ-45 is as follows:

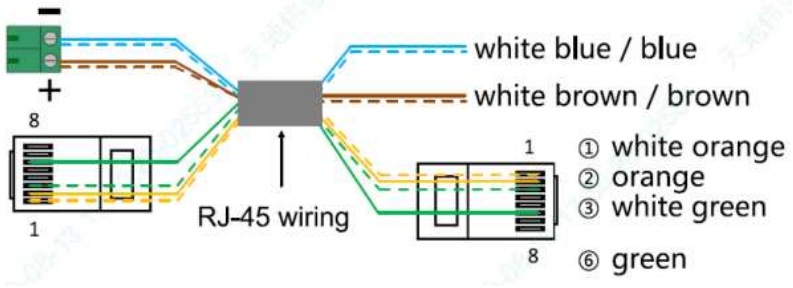

Non-POE power supply-wire sequence diagram

4. Tighten the back cover to the camera housing, adjust the length of cable, and then tighten the waterproof lock to the marked position. (Note: Please keep the back cover aligned with the scale on the camera housing during the adjustment of waterproof lock).

5. Fasten the camera housing to the bracket and tighten the top screw. Loosen the bracket adjusting nut on the camera bracket, adjust the camera angle, and tighten it after adjusting the picture to the required scene. Remove the protective film from the housing and complete the installation.

Note: The mounting surface of camera must have sufficient bearing capacity.

3.2.3. HD Network IR Dome Camera

(Unit: mm)

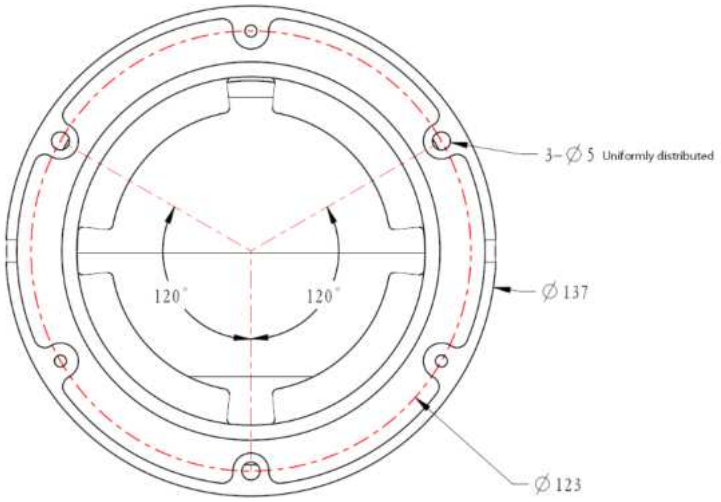

Installation Diagram of HD Network IR Dome Camera-V2.0

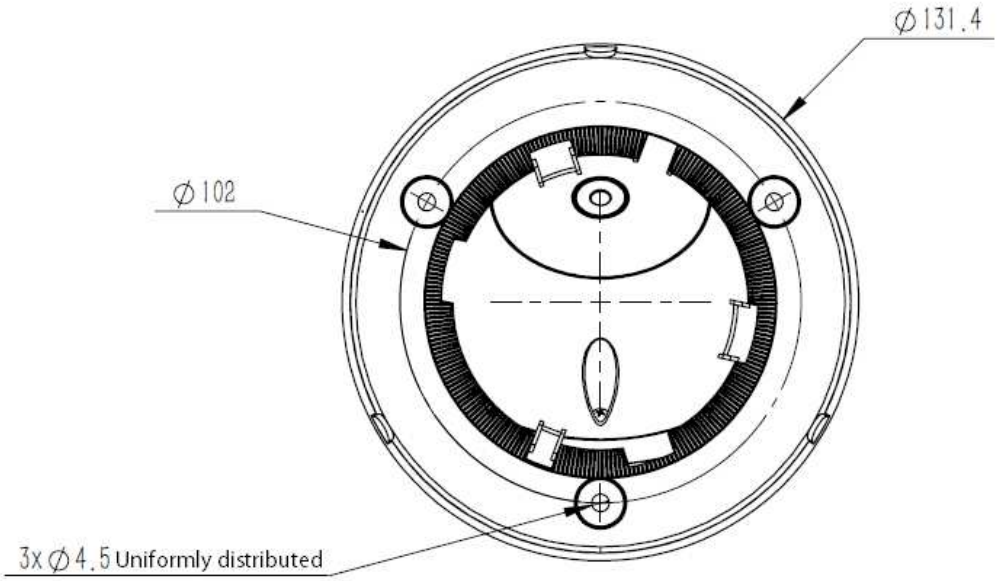

Installation Diagram of HD Network IR Dome Camera-V3.0/V4.0

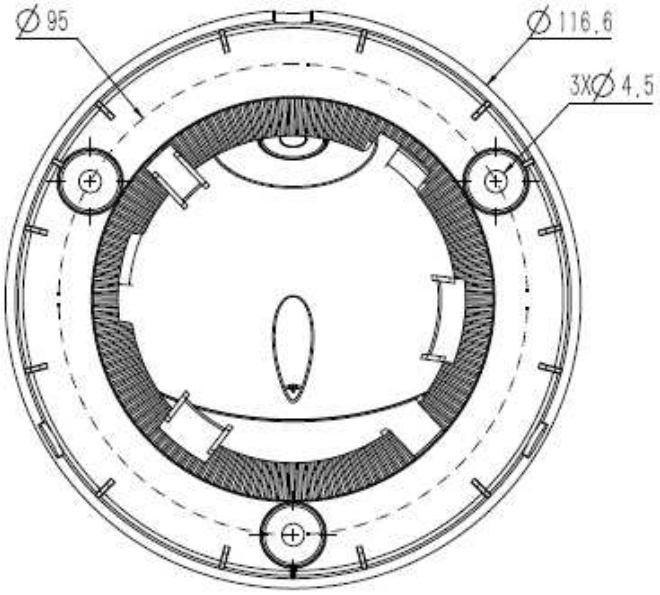

Installation Diagram of HD Network IR Dome Camera-V5.0

Steps:

1. Take out the camera in the packaging box, loosen the 3 mounting screws on the housing of V2.0 equipment, and remove the chassis. Rotate the chassis of V3.0/V4.0/V5.0 equipment to the indicated position and remove the chassis.

2. Mark the mounting hole position of camera on the wall with a ink pen, make holes on the indicated hole position with a electric drill, and drive the expansion rubber plug into the hole that has just been made.

3. Fasten the chassis on the wall with screws. Reassemble the components removed in Step 1. Adjust the direction of camera to a suitable position, and tighten the 3 mounting screws on the housing of V2.0 equipment. Rotate the component of V3.0/V4.0/V5.0 equipment into the snap position and then fasten it.

Note: The mounting surface of camera must have sufficient bearing capacity.

3.2.4. HD Network IR Dome Camera (MINI)

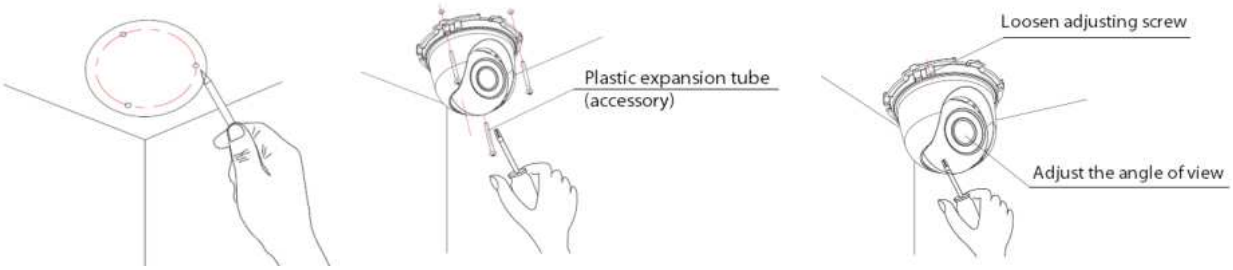

Installation Diagram of HD Network IR Dome Camera (MINI)

Steps:

1. Mark the positions of holes for mounting camera on the wall using an ink pen.

2. Make holes at the indicated position with an electric drill, and drive the expansion rubber plug into the hole.

3. Take out the camera in the packaging box, remove the dome cover, and fasten the dome to the ceiling with screws.

4. Loosen the adjusting screw, adjust the camera lens to an appropriate angle, and then re-fasten the adjusting screw.

5. Align the dome cover with the mounting position of the base, and then rotate and fasten it.

Note: The mounting surface of camera must have sufficient bearing capacity.

3.2.5. HD Network Safe (Non-) IR Dome Camera

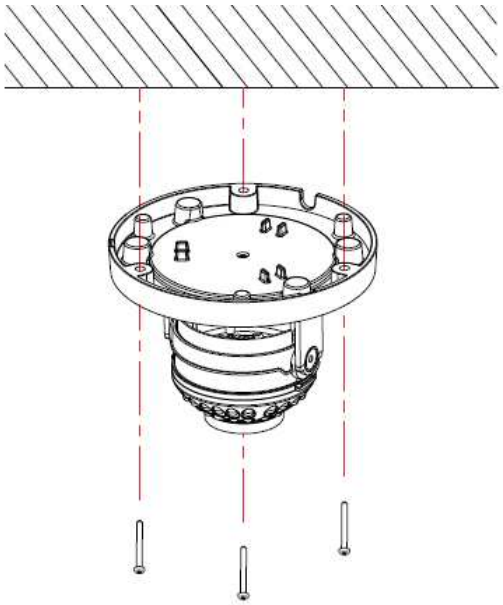

Installation Diagram of (Non-) Safe IR Dome Camera -V1.0

Steps:

1. Mark the positions of holes for mounting camera on the wall using an ink pen. Make holes on the marked positions using an electric drill, drive the expansion rubber plug into the hole.

2. Take out the camera in the packaging box, and remove the dome cover; and then fasten the dome to the ceiling using mounting screws.

3. Loosen the adjusting screw, adjust the camera lens to an appropriate angle, and then re-fasten the adjusting screw.

4. Align the dome cover with the mounting position of the base, and then fasten it by turning.

5. Finally, remove the protective film on the dome cover (please protect the transparent cover of dome, to avoid oil stains and scratches).

Note:

(1) The mounting surface of camera must have sufficient bearing capacity.

(2) Please use the dome camera as soon as possible after unpacking.

(3) Fog may be caused when disassembling the equipment in wet environments.

(4) To ensure the waterproof effect, please tighten the screws.

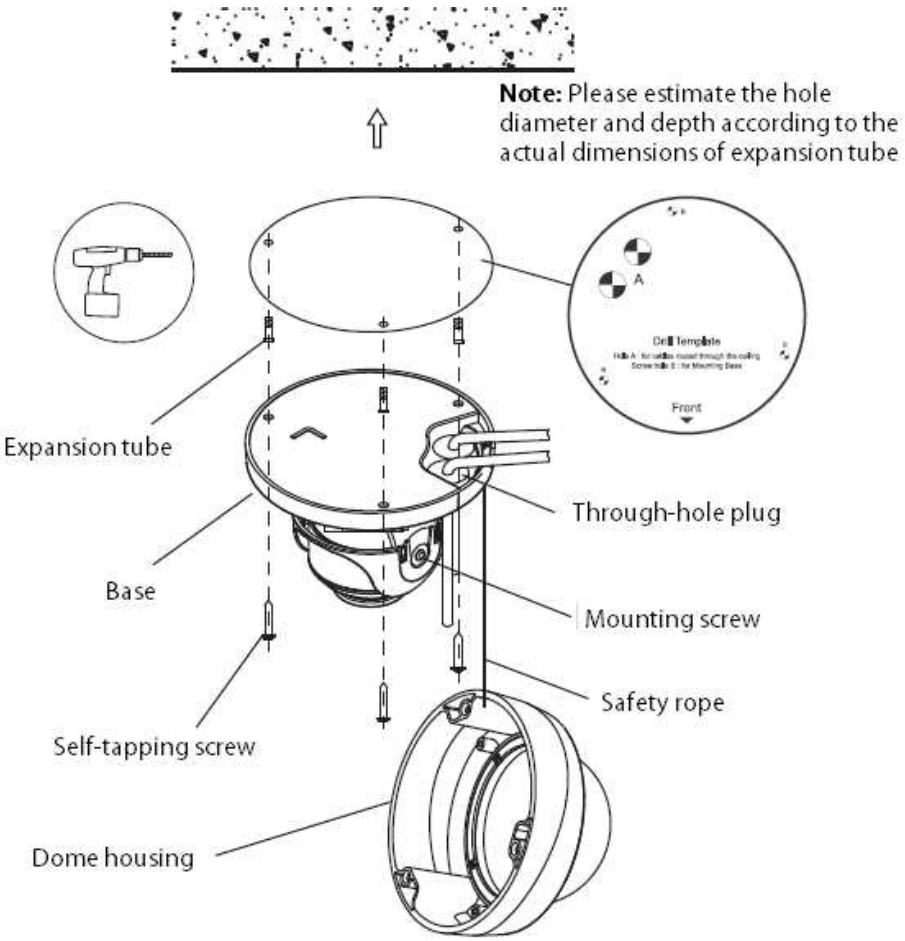

Installation Diagram of HD Network Safe (Non-) IR Dome Camera-V2.0

Steps:

1. Mark the mounting hole position of camera on the wall with a ink pen or positioning sticker, make holes on the indicated hole position with a electric drill, and drive the expansion rubber plug into the hole.

2. For models without a tail cable: loosen the screws, remove the dome housing, pass the power cord, audio cable (optional) and network cable through the cable hole plug at the base of dome, with a cable diameter of 3-5mm (Note: pull back after passing the cable to ensure water resistance), and then fasten the base of dome to the wall or ceiling. Connect the power cable and audio cable (optional) to the corresponding interface of camera. After making the plug of the network cable, insert it into the Ethernet interface of camera, and then fasten the base of dome base to the wall or ceiling.

3. For models with a tail cable: connect the power supply, network cable and other parts to the corresponding interface of camera. Loosen the screws, remove the dome housing, and fasten the base

of dome to the wall or ceiling.

4. Adjust the lens to the required scene, and then tighten the two mounting screws. The recommended torque is 6-7kgf.cm.

5. Before installing the equipment in a humid environment, please replace the desiccant and then fasten the dome housing to the base of dome, and finally remove the protective film on the housing (Note: do not crimp when installing dome housing on the base).

Note:

(1) The mounting surface of camera must have sufficient bearing capacity.

(2) Fog may be caused when disassembling the equipment in wet environments.

(3) To ensure the waterproof effect, please tighten the screws.

3.2.6. HD Network Gun Camera

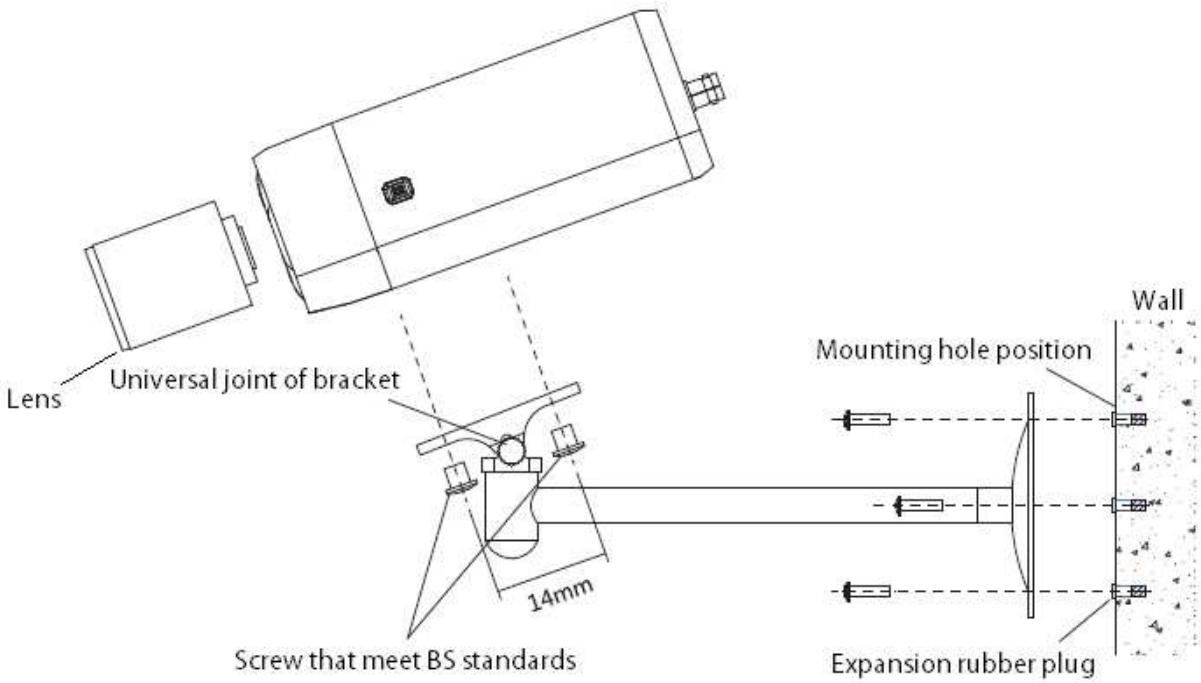

Installation Diagram of HD Network Gun Camera

Steps:

1. Mark the positions of holes for mounting camera on the wall using an ink pen.

2. Make holes on the marked positions using an electric drill.

3. Drive the expansion rubber plug into the hole.

4. Fasten the wall mounting bracket on the wall with screws.

5. Take out the camera in the packaging box, align the two screws with the camera screw mounting position, and then tighten them by turning.

6. Adjust the universal joint of bracket to a proper position and then tighten it.

Note:

(1) Brackets must be purchased separately.

(2) The mounting surface of camera must have sufficient bearing capacity.

3.2.7. HD Network Zoom IR Gun Camera

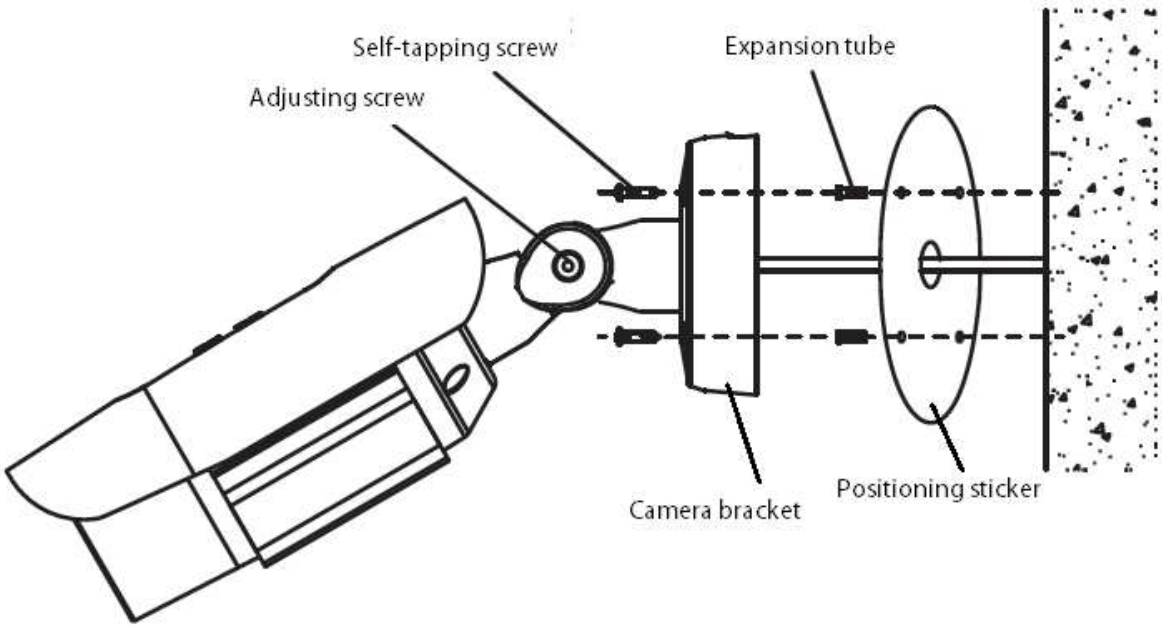

Installation Diagram of HD Network Zoom IR Gun Camera (with integrated bracket)

Steps:

1. Paste the positioning stickers on the wall.
2. Make holes on the marked positions using an electric drill.
3. Drive the expansion rubber plug into the hole.
4. Fasten the wall mounting bracket on the wall with screws.
5. Adjust the screw, rotate the angle to the target position, and then tighten the screw.
6. Adjust the sunshade back and forth, to avoid blocking video or IR light.

Note: The mounting surface of camera must have sufficient bearing capacity.

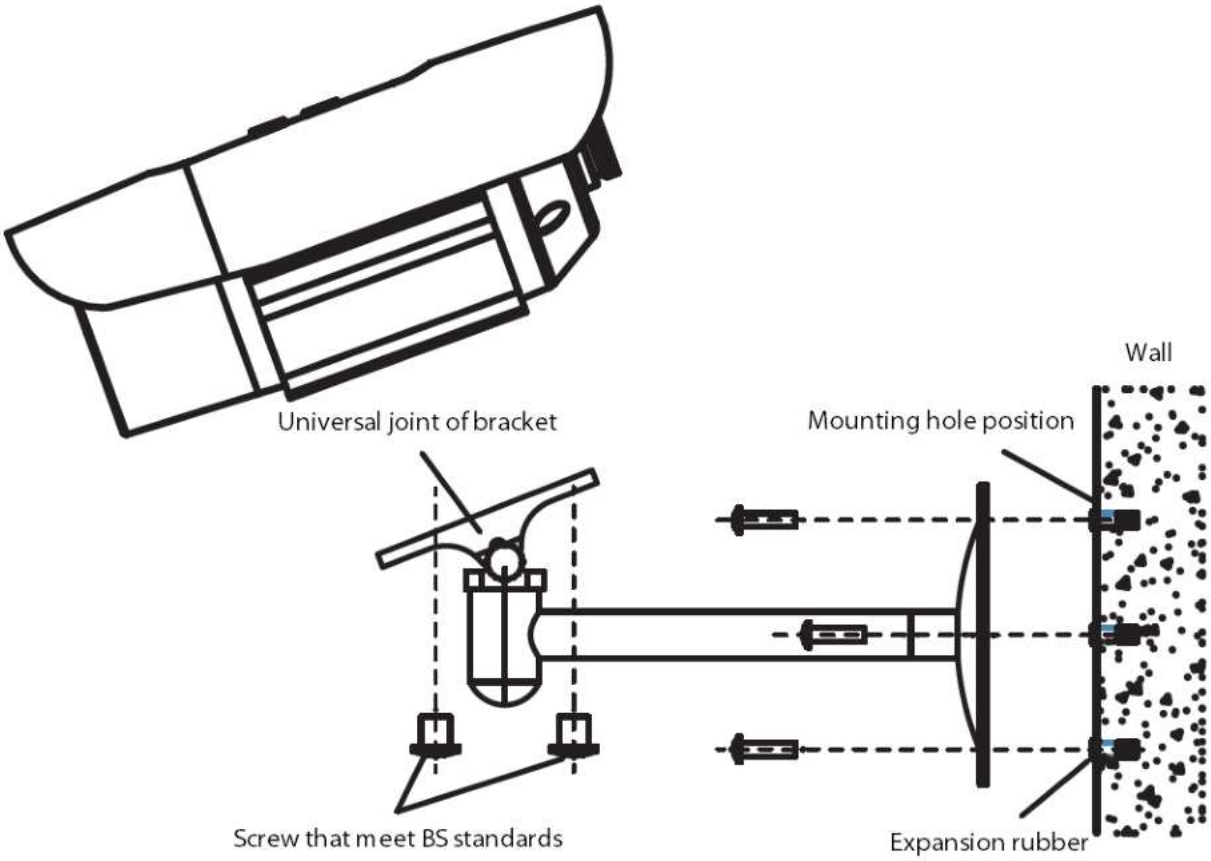

Installation Diagram of HD Network Zoom IR Gun Camera (without integrated bracket)

Steps:

1. Mark the positions of holes for mounting camera on the wall using an ink pen.
2. Make holes on the marked positions using an electric drill.
3. Drive the expansion rubber plug into the hole.
4. Fasten the wall mounting bracket on the wall with screws.
5. Align the two screws with the screw mounting position of camera, and then tighten them by turning.
6. Adjust the universal joint of bracket to a proper position and then tighten it.

Note:

(1) Brackets must be purchased separately.

(2) The mounting surface of camera must have sufficient bearing capacity.

3.2.8. Dimensions of HD Network Zoom （Non-)IR Dome Camera

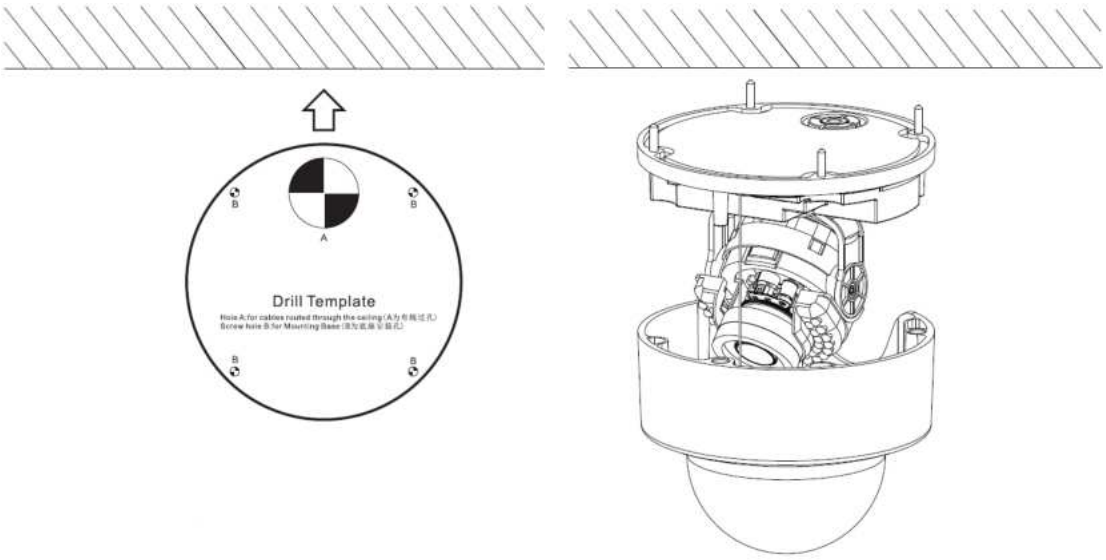

Installation Diagram of HD Network Zoom IR Dome Camera-V2.0

Steps:

1. Paste the positioning stickers on the wall.

2. Make holes on the marked positions using an electric drill.

3. Drive the expansion rubber plug into the hole.

4. Fasten the base of camera to the wall with screws.

5. Rotate the lens to the target angle.

6. Before installing the equipment in a humid environment, please replace the desiccant and then fasten the dome housing to the base of dome, and finally remove the protective film on the housing (Note: do not crimp when installing dome housing on the base).

Note:

(1) The mounting surface of camera must have sufficient bearing capacity.

(2) Fog may be caused when disassembling the equipment in wet environments.

(3) To ensure the waterproof effect, please tighten the screws.

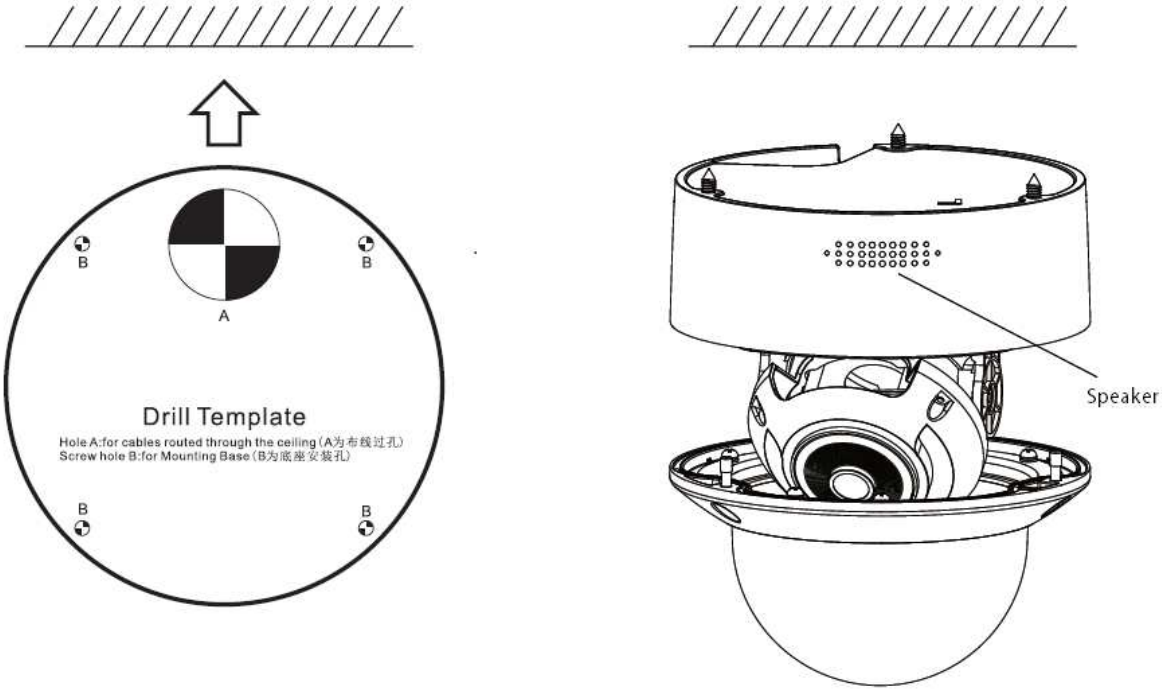

Installation Diagram of HD Network Zoom IR Dome Camera-V3.0peaker

Steps:

1. Paste the positioning stickers on the wall.

2. Make holes on the marked positions using an electric drill.

3. Drive the expansion rubber plug into the hole.

4. Fasten the base of camera to the wall with screws.

5. Rotate the lens to the target angle.

6. Before installing the equipment in a humid environment, please replace the desiccant and then fasten the dome housing to the base of dome, and finally remove the protective film on the housing (Note: do not crimp when installing dome housing on the base).

Note:

(1) The mounting surface of camera must have sufficient bearing capacity.

(2) Fog may be caused when disassembling the equipment in wet environments.

(3) To ensure the waterproof effect, please tighten the screws.

3.2.9. HD Network Special-shaped Safe IR Dome Camera

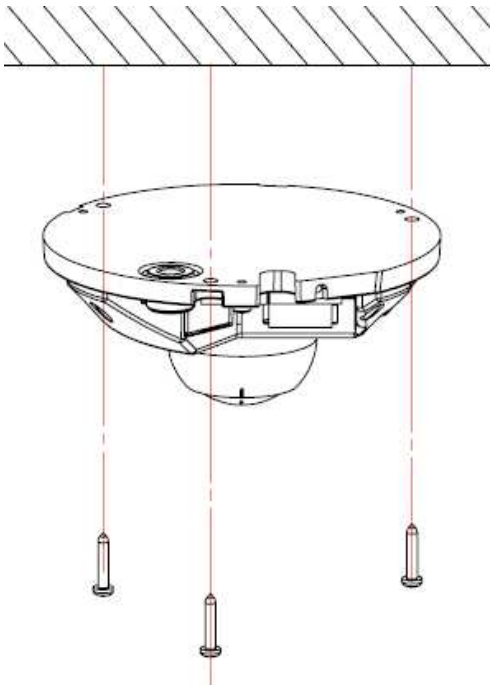

Installation Diagram of HD Network Special-shaped Safe IR Dome Camera

Steps:

1. Make a hole at the mounting position according to the dimensional drawing, and drive the expansion rubber plug into the hole.

2. Take out the camera in the packaging box, and remove the dome cover; and then fasten the dome to the ceiling using mounting screws.

3. Loosen the adjusting screw, adjust the camera lens to an appropriate angle, and then re-fasten the adjusting screw.

4. Align the dome cover with the mounting position of the base, press down the dome cover and fasten it with screws.

5. Finally, remove the protective film on the dome cover (please protect the transparent cover of dome, to avoid oil stains and scratches).

Note: The mounting surface of camera must have sufficient bearing capacity.

3.3 Waterproof Construction Specifications

The zoom (non-) IF dome camera is divided into two models: model with tail cable and model with incoming cable. The model with incoming cable is equipped with a waterproof lock, a single hole supports the wire diameter of 3-5mm. For the lock with 4 holes, please keep the original plugs for the holes not used; for the lock with 3 holes, do not puncture the rubbers at the holes not used.

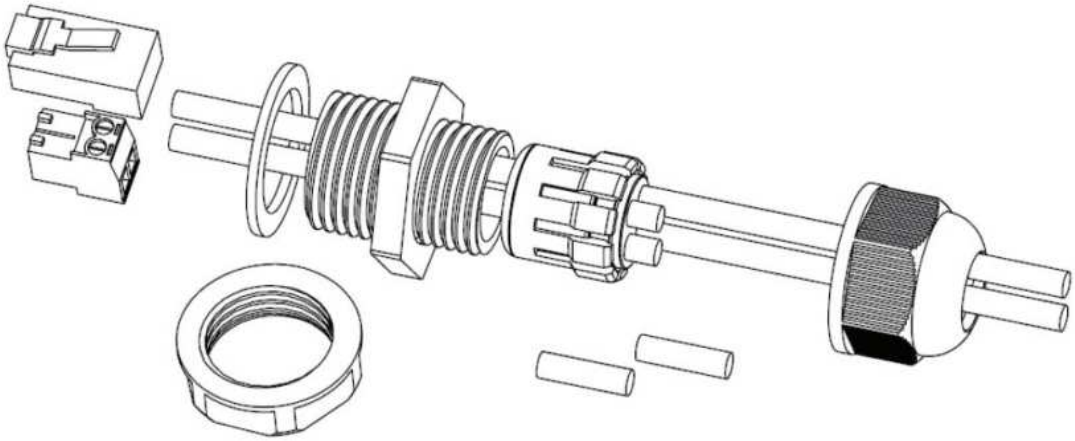

Installation Instructions for Waterproof Lock with 4 Holes

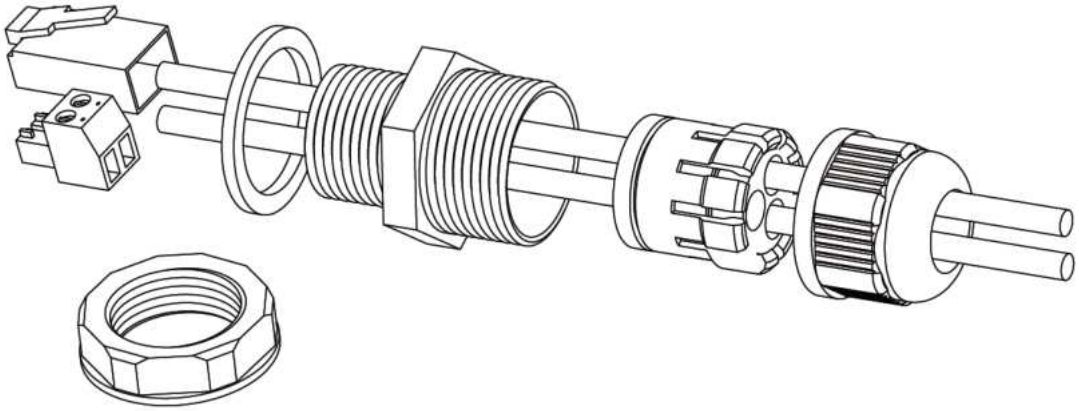

Installation Instructions for Waterproof Lock with 3 Holes

You may select to use side or bottom outlet according to needs, please tighten the waterproof lock with a wrench, to prevent water and fog from entering. Do not open the protective guard in humid environments, to prevent fogging. To prevent frogging, some models are equipped with new desiccants, please replace desiccants for some models before installing the protective guard.

For products with tail cables and waterproof design, please take the following waterproof measures during installation:

(1) The power port must be wrapped with waterproof tape to ensure water resistance, otherwise, there may be a risk of short circuit.

(2) For the waterproofing of Ethernet interface, please refer to the following figure for construction and installation.

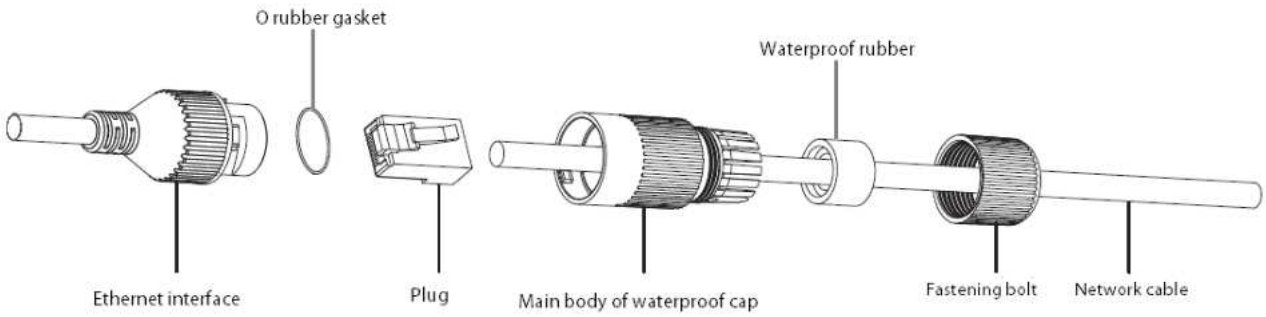

Waterproof installation instructions of network cable

(3) Please lower the SR of the tail cable to the position below the camera, as shown in the figure below.

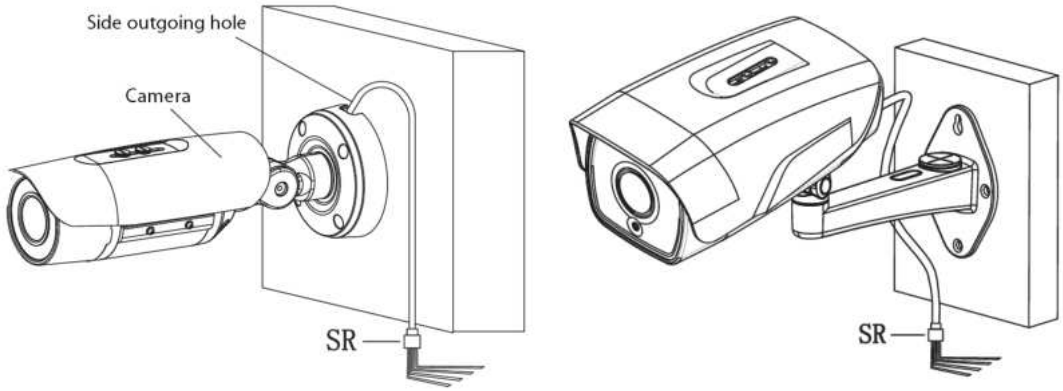

Installation Diagram of Tail Cable

4 Interface Description

4.1 Camera Tail Cable Interface Description

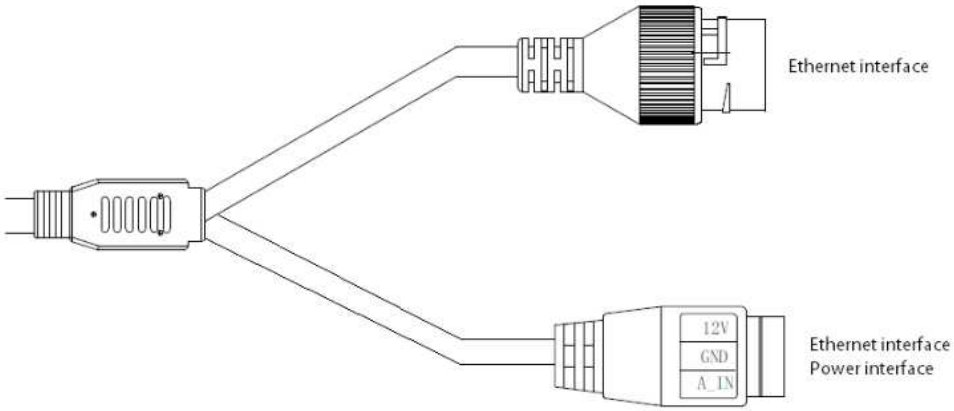

I-type camera tail cable interface

Interface Description:

Type	Functions	Name	Description
System interface	Power supply	DC12V GND	Input of DC12V ± 10%, please select matching power supply according to suggestions Some models are powered by POE and can provide DC12V output
	Ethernet interface	ETHERNET	10M / 100M, RJ45 interface Supported by some models POE power supply
Function interface	Audio input	A_IN GND	Linear signal input, input voltage ≤1V GND is the common terminal

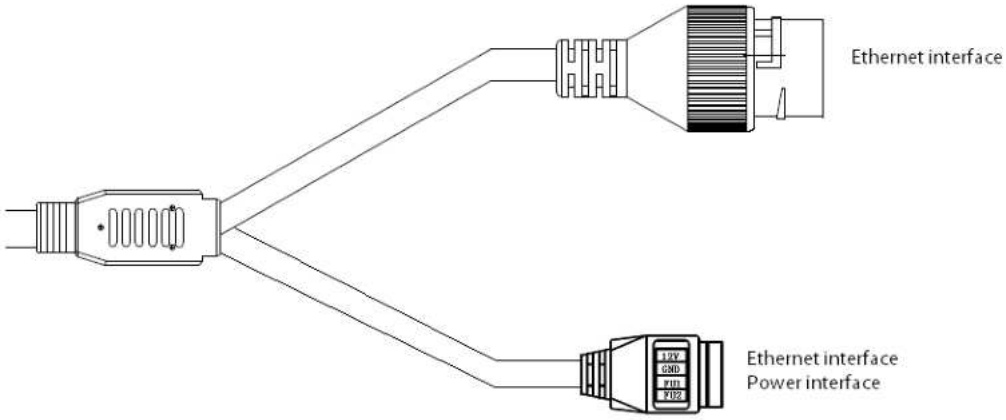

Type II camera tail cable interface

Interface Description:

Type	Functions	Name	Description
System interface	Power supply	DC12V GND	Input of DC12V ± 10%, please select matching power supply according to suggestions Some models are powered by POE and can provide DC12V output
	Ethernet interface	ETHERNET	10M / 100M, RJ45 interface Supported by some models POE power supply
Function interface	Function interface 1	FU1 GND	See label description for details GND is the common terminal
	Function interface 2	FU2 GND	See label description for details GND is the common terminal

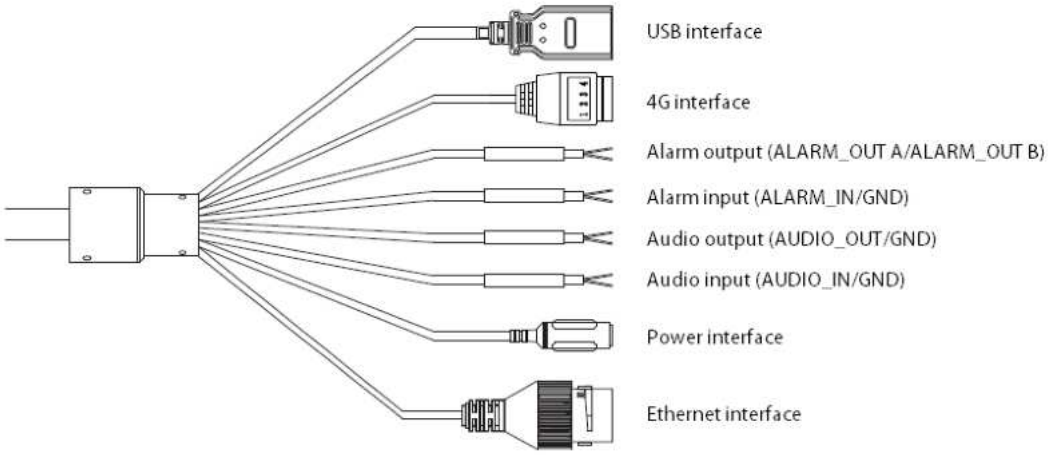

Type III camera tail cable interface

Description:

(1) The specific vehicle-mounted camera power supply adopts BMW connector and needs to be used with an extension cable. The input voltage supports DC12V - DC24V.

(2) The line sequence of the extension line is as follows:

Extension cord of tail cable (vehicle-mounted model)

Interface Description:

Type	Functions	Name	Description
System interface	Power supply	DC12V IN	Input of DC12V ± 10%, please select matching power supply according to suggestions (Excluding special vehicle-mounted camera) Some models are powered by POE and can provide DC12V output
	Ethernet interface	ETHERNET	10M / 100M, RJ45 interface
Extension ports (Optional)	Audio interface	AUDIO_IN	Linear signal input, GND is the common terminal, input voltage: ≤1V; (optional function)
		AUDIO_OUT	Linear output, GND is the common terminal, used with active speakers; (optional function)
	Alarm interface	ALARM_IN	Switching signal input, GND is the common terminal (optional function)
		ALARM_OUT	Switching signal output (optional function)
	RS485 interface	RS485	A is 485 positive (+), B is 485 negative (-) (optional function)
	4G	4G	1: GND 2: RS485- (RS485B) 3: RS485 + (RS485A) 4: DC5V (optional function)
Storage interface	Support	USB	8G - 64G is recommended, please power off the device before disassembly

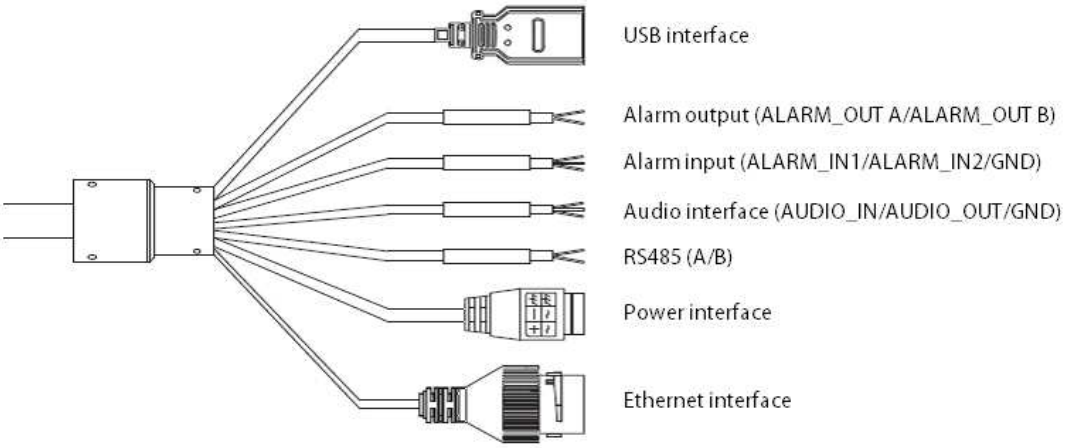

Type IV camera tail cable interface

Interface Description:

Type	Functions	Name	Description
System interface	Power supply	POWER	DC12V ± 10%, Supported by some models AC24V Please refer to the actual label
	Earth	⏚	Connected to the earth to prevent static electricity / surges from damaging the equipment
	Ethernet interface	ETHERNET	10M / 100M, RJ45 interface
Extension ports (Optional)	Audio interface	AUDIO_IN	Linear signal input, GND is the common terminal, input voltage: ≤1V (optional function)
		AUDIO_OUT	Linear output, GND is the common terminal, used with active speaker (optional function)
	Alarm interface	ALARM_IN	Switching signal input, GND is the common terminal
		ALARM_OUT	Switching signal output
	Control interface	RS485	A is RS485 +, B is RS485-
Storage interface	USB	USB	Expandable memory or Wifi module, the recommended memory is 8G - 64G, please power off the device before disassembly

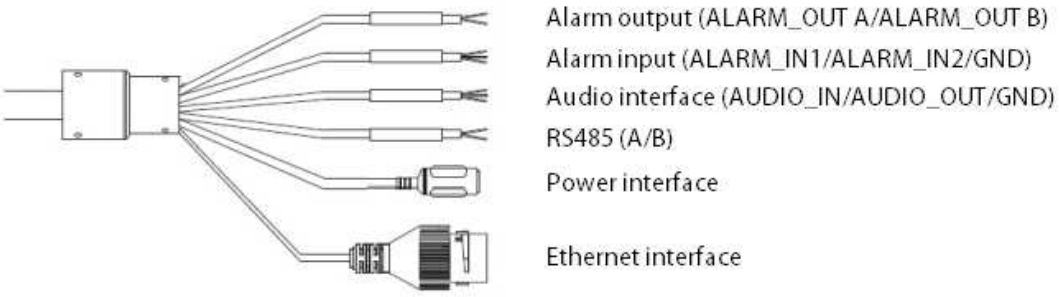

Tail line interface of type V camera

Interface Description:

Type	Functions	Name	Description
System interface	Power supply	POWER	DC12V±20% Please refer to the actual label
	Ethernet interface	ETHERNET	10M / 100M, RJ45 interface
Extension ports (Optional)	Audio interface	AUDIO_IN	Linear signal input, GND is the common terminal, input voltage: ≤1V (optional function)
		AUDIO_OUT	Linear output, GND is the common terminal, used with active speaker (optional function)
	Alarm interface	ALARM_IN	Switch signal input, 2 channels supported, GND is the common terminal
		ALARM_OUT	Switching value or relay output signal output (subject to the actual object)
	Control interface	RS485	A is RS485 +, B is RS485-

4.2 HD Network Zoom IR Gun Camera

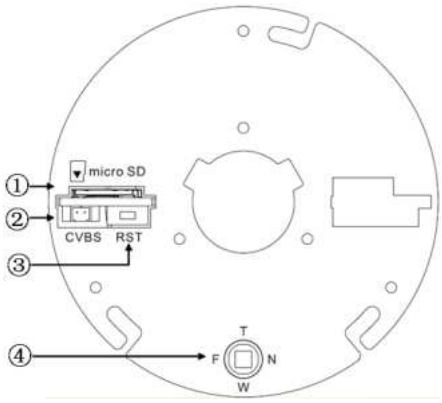

① micro SD card slot

② Analog video output, used with BNC conversion cable (accessory) (supported by some models)

③ Reset button

④ Focusing control for electric lens, press for one-button focusing (supported by some models)

Internal interface of HD network zoom IR gun

Interface Description:

Type	Functions	Name	Description
System interface	Power supply	POWER	DC12V (± 10%), Supported by some models AC24V (± 25%)
	Ethernet interface	ETHERNET	10M / 100M / 1000M (1000M for some models), RJ45 interface, Supported by some models POE
	Reset	RESET	After holding for 5 seconds, the system will restore factory settings
Audio and video interface	Video output	VIDEO OUT /CVBS	75Ωp-p analog video signal;
	Audio input	AUDIO IN	Audio linear input
	Audio output	AUDIO OUT	Audio linear output
Alarm interface	Alarm Input	ALARM IN	GND is the common terminal; 1/2 is the 2-way alarm input interface
	Control output	ALARM OUT	1A / 1B, signal relay output interface

Type	Functions	Name	Description
Storage interface	TF card	micro SD	8G - 64G is recommended, please power off the device before disassembly
	USB	USB	Expandable U disk or Wifi adapter, please power off the device. Description: 1. The recommended U disk capacity is 8G - 64G 2. If a micro SD card has been installed, U disk cannot be expanded
Extension ports	485 interface	RS485A/B	485 communication interface
	Motorized lens	T/W/F/N	Motorized lens control, T zoom in / W zoom out / F far / N near Press for one-button focusing (supported by some models)

4.3 Dimensions of HD Network Zoom （Non-)IR Dome Camera

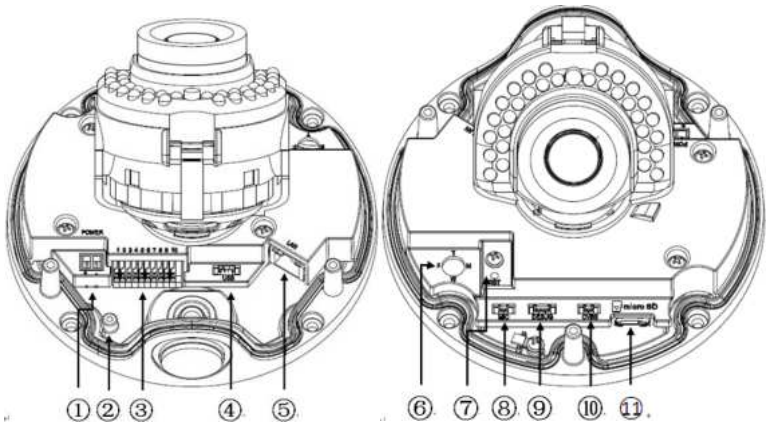

Internal interface of HD network zoom (non-) IF dome camera-V2.0

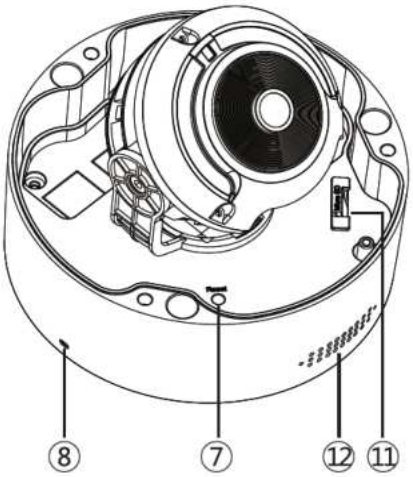

Internal interface of HD network zoom (non-) IF dome camera-V3.0

① Power interface, support DC12V (Supported by some models AC24V)

② Earthing rod

③ Signal cable interface, see chassis label for details

④ USB interface, GND/D+/D-/5V from left to right (supported by some models)

⑤ Ethernet interface, 10M / 100M / 1000M (some models are 1000M, Supported by some models POE)

⑥ Focusing control for electric lens, press for one-button focusing (supported by some models)

⑦ Reset button

⑧ Built-in MIC interface

⑨ Debugging interface, only used by the manufacturer for debugging

⑩ Analog video output, used with BNC conversion cable (accessory) (supported by some models)

⑪ micro SD card slot

⑫ Built-in speaker

Interface Description:

Type	Functions	Name	Description
System interface	Power supply	POWER	DC12V (± 10%), Supported by some models AC24V (± 25%)
	Ethernet interface	ETHERNET	10M / 100M / 1000M (1000M for some models), RJ45 interface, Supported by some models POE
	Reset	RESET	After holding for 5 seconds, the system will restore factory settings
	Debuggin g interface	DEBUG	Debugging interface, only used by the manufacturer for debugging
Audio and video interface	Video output	VIDEO OUT /CVBS	75Ωp-p analog video signal;
	Audio input	AUDIO IN	Audio input (Mic in/Line in)
	Audio output	AUDIO OUT	Audio linear output
Alarm interface	Alarm Input	ALARM IN	GND is the common terminal; 1/2 is the 2-way alarm input interface
	Control output	ALARM OUT	1A / 1B, signal relay output interface
Storage interface	TF card	micro SD	8G - 64G is recommended, please power off the device before disassembly
	USB	USB	Expandable U disk or Wifi adapter, please power off the device. Description: 1. The recommended U disk capacity is 8G - 64G 2. If a micro SD card has been installed, U disk cannot be

Type	Functions	Name	Description
			expanded
Extension ports	485 interface	RS485A/B	485 communication interface
	Motorized lens	T/W/F/N	Motorized lens control, T zoom in / W zoom out / F far / N near Press for one-button focusing (supported by some models)

4.4 Network Gun Camera Series

4.4.1. Network Gun Camera-V2.0

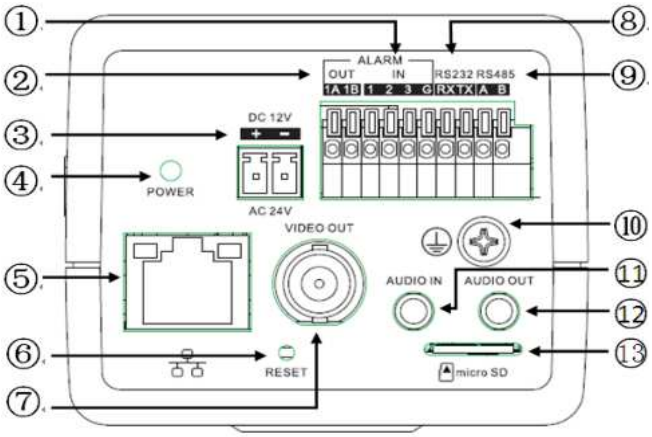

Interface of Type I network gun camera-V2.0

① 1 and 2 are 2-way alarm inputs, 3 is synchronous switch interface of alarm

② Alarm Output

③ Power interface, support DC12V (Supported by some models AC24V)

④ Power indicator

⑤ Network

⑥ Reset button

⑦ Analog video output

⑧ Extended RS232

⑨ Extended RS485

⑩ Lightning protection earthing wire interface

⑪ Audio input

⑫ Audio output

⑬ micro SD card slot

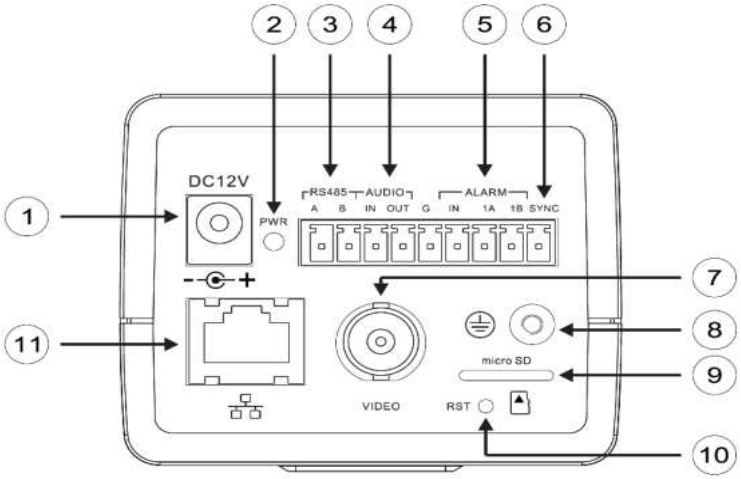

Interface of Type II network gun camera-V2.0

① Power interface, support DC12V

② Power indicator

③ Extended RS485 interface

④ Audio interface

⑤ Alarm interface, IN is alarm input, and 1A and 1B are alarm output.

⑥ Synchronous switching interface of alarm

⑦ Analog video interface

⑧ Earthing rod

⑨ micro SD card slot

⑩ Reset button

⑪ Network interface

Type	Functions	Name	Description
System interface	Power supply	POWER	DC12V (± 10%), Supported by some models AC24V (± 25%)
	Ethernet interface	ETHERNET	10M / 100M / 1000M (1000M for some models), RJ45 interface, Supported by some models POE
	Reset	RESET	After holding for 5 seconds, the system will restore factory settings
	Aperture interface	LENS	Lenses with controlled DC aperture (Supported by some models P-iris aperture lenses)
Audio and video interface	Video output	VIDEO OUT /CVBS	75Ωp-p analog video signal
	Audio input	AUDIO IN	Audio input (Mic in/Line in)
	Audio output	AUDIO OUT	Audio linear output
Alarm interface	Alarm Input	ALARM IN	Type I gun camera: G is the common terminal; 1/2 is the two-way input interface of alarm, and 3 is the synchronous switching interface of alarm. The black and white/color mode of camera can be switched by shorting or disconnecting with G. Type II gun camera: G is the common terminal; IN is the alarm input interface, SYNC is the synchronous switching interface of alarm, and the black and white/color mode of camera can be switched by shorting or disconnecting with G.
	Control output	ALARM OUT	1A / 1B, signal relay output interface
Storage interface	Support	micro SD	The recommended storage capacity is 8G - 64G, please power off the equipment before disassembly
Extension ports	485 interface	RS485A/B	485 communication interface

Type	Functions	Name	Description
	232 interface	RX/TX/G	RX is the receiving port / TX is the sending port / G is the reference ground (only supported by Type I)

4.4.2. Network Gun Camera-V3.0

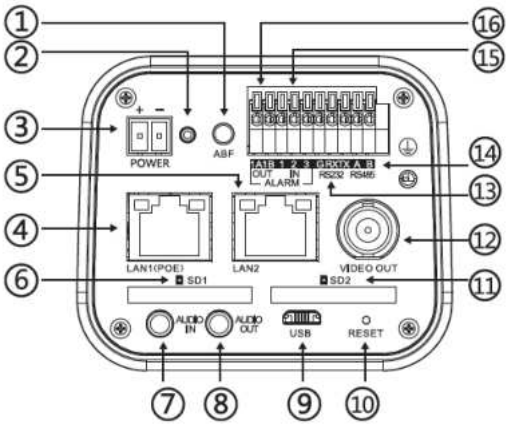

Interface of Type I Network Gun Camera-V3.0

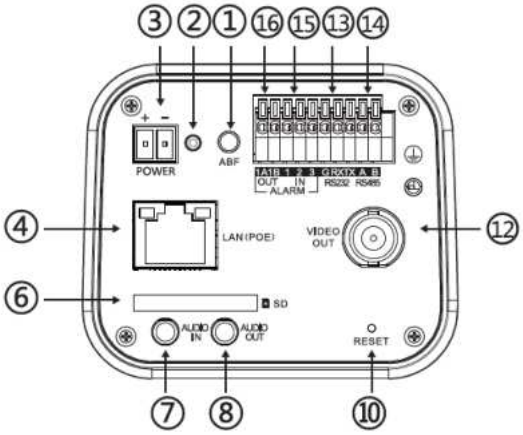

Interface of Type II Network Gun Camera-V3.0

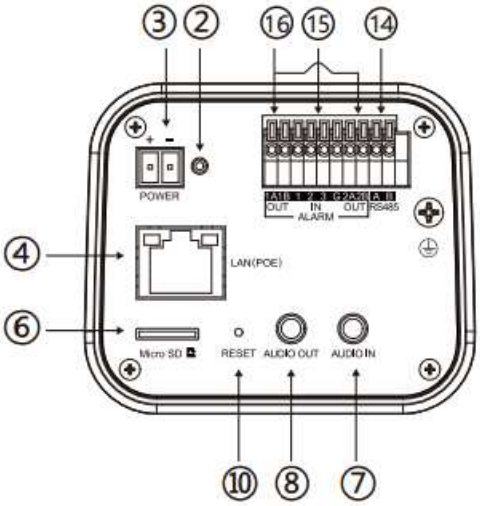

Interface of Type III Network Gun Camer-V3.0

① ABF button: click it to start immediately (supported by some models)

② Indicator light: if the light is always on in red, the power supply is normal; if the light is flashing in blue, ABF is running

③ Power interface, support DC12V (Supported by some models AC24V)

④ Network interface, support POE

⑤ Network interface 2 (supported by some models)

⑥ SD card slot

⑦ Audio input

⑧ Audio output

⑨ micro USB (supported by some models)

⑩ Reset button

⑪ SD card slot 2 (supported by some models)

⑫ Analog video output

⑬ RS 232 interface (supported by some models)

⑭ RS 485 interface (supported by some models)

⑮ Alarm input, 1 and 2 are alarm inputs, and 3 is the synchronous switching interface of alarm

⑯ Alarm output (supported by some models)

Type	Functions	Name	Description
System interface	Power supply	POWER	DC12V (± 10%), Supported by some models AC24V (± 25%)
	Ethernet interface	ETHERNET	10M / 100M / 1000M (Supported by some models 1000M), RJ45 interface, Supported by some models POE
	Reset	RESET	After holding for 5 seconds, the system will restore factory settings
	Aperture interface	LENS	Lenses with controlled DC aperture (Supported by some models P-iris aperture lenses)
Audio and video interface	Video output	VIDEO OUT /CVBS	75Ωp-p analog video signal
	Audio input	AUDIO IN	Audio input (Mic in/Line in)
	Audio output	AUDIO OUT	Audio linear output
Alarm interface	Alarm Input	ALARM IN	G is the common terminal; 1/2 is the 2-way alarm input interface, and 3 is the synchronous switching interface of alarm. The black and white/color mode of camera can be switched by shorting or

Type	Functions	Name	Description
			disconnecting with G
	Control output	ALARM OUT	1A / 1B, signal relay output interface
Storage interface	SD card	SD	The recommended storage capacity is 8G-256G, please power off the equipment before disassembly
Extension ports	485 interface	RS485A/B	485 communication interface
	232 interface	RX/TX/G	RX is the receiving port / TX is the sending port / G is the reference ground

5 WEB client

5.1 Operating Environment

It is recommended to run under the operating system environment of Win7 and above. In order to better operate and use the system, and fully reflect the performance and effects, please ensure that the following items are set or installed correctly after the system is successfully installed:

(1) The display resolution is set to 1920 × 1080 or higher, and the color is set to enhanced color (32-bit), please refer to Windows help document or online help for how to set the resolution and color of monitor.

(2) Make sure that the font required for this system-Song font is installed in the Windows operating system. If the interface of this system is displayed abnormally, the fonts required by this system may not be installed, or the required fonts have been damaged, and fonts need to be reinstalled.

5.2 IE Settings

You need to download ActiveX controls before using this series of network video products for

the first time. Before downloading, you need to set the IE browser appropriately to ensure that the controls are downloaded successfully.

Note: Use the IE browser of Windows operating system, to ensure that the version is 8.0 or above. Except for Firefox and Google browsers, please do not use other third-party browsers and any IE browser shell programs such as Maxthon, Window of the World. We do not guarantee that you can log in normally with such software.

If the computer is connected to the camera for the first time, please go to “Internet Options”-“Security”-“Trusted Sites”-“Sites” and add the IP of the camera to the list of “Trusted Sites”. Then set the “Custom Level” and set all the options in “ActiveX Controls and Plug-ins” to “Enable”, to ensure that the computer can download and run the controls normally.

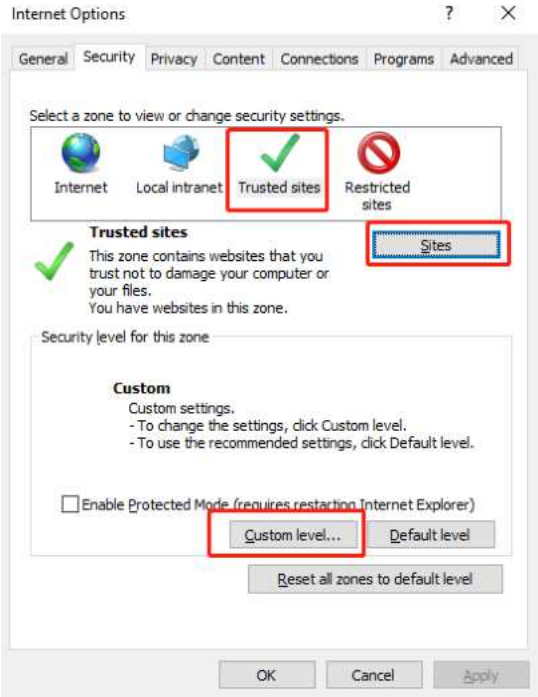

IE Browser-Internet Options

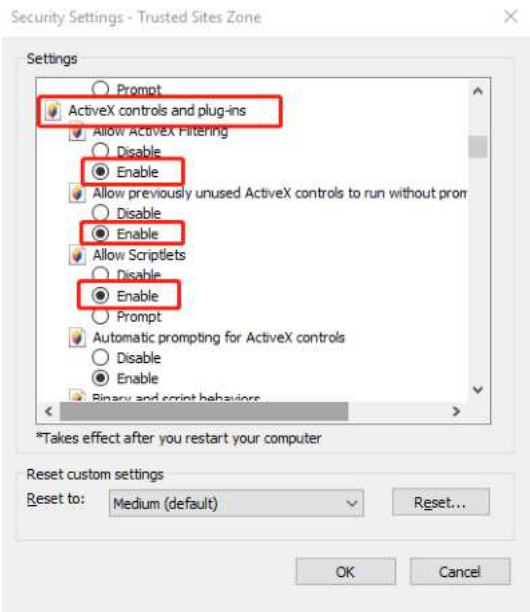

Trusted Site-Custom Level

5.3 Login Device

The default IP address of the device is: 192.168.1.2, subnet mask: 255.255.255.0, gateway: 192.168.1.1. Please set the IP address of the computer and the IP address of the device in the same network segment: for example, set the IP address of the computer to 192.168.1.3 to access the device through IE browser. Open the IE browser, input the IP address of the network video device in the address bar, and click "go" to log in to the device. If it is the first time to use, the following interface will appear.

Login Device-> Equipment activation

Equipment activation interface

Some devices need to be activated before IE interface is to be used . Set the login password in the activating device window and click OK to enter the IE login interface.

Prompt box for activating device

Login Device-> IE login interface

IE login interface

Enter the correct user name and password in the login window, and click “Login” to enter the preview interface later.

Description:

(1) If the equipment port number is modified, you need to enter the correct port number, and the default port number is 3000.

(2) If the device supports activation, the password is the one set at the time of activation.

(3) If the device does not support activation, the password is 1111.

Please click to download the plugin. If installed already, pleasejust press F5 to refresh it (no need install again). Please close the browser during installing.

Click the text link to open the save or run control interface, as shown in the following figure. Select "save" to download Swallow.exe to the local area, and select "run" to install Swallow.exe automatically after downloading.

Operating system of Windows XP-Interface for saving or running the control

The control needs to be installed after downloading, and the installation program interface for running the control will pop up, as shown below; and then click the “Run” button.

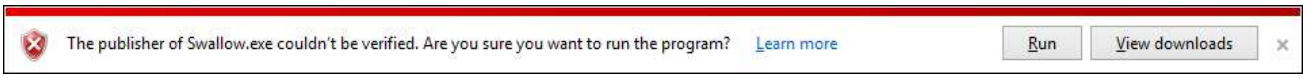

Operating System of Windows 7 and above-Installation program interface for running the control

When the installation control interface appears, click "Next" or "Next step", as shown below.

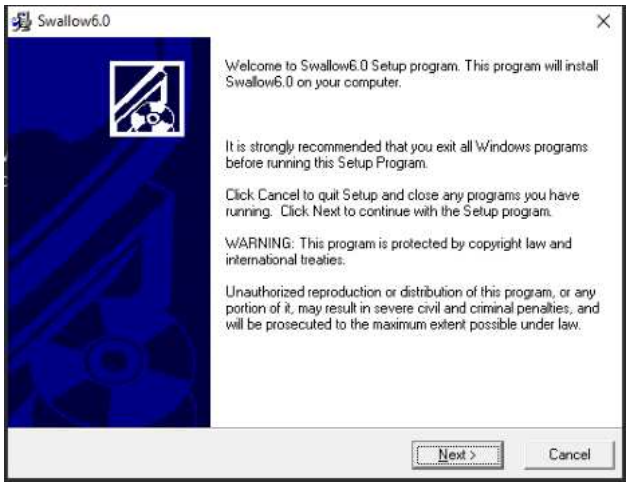

Interface for installing control

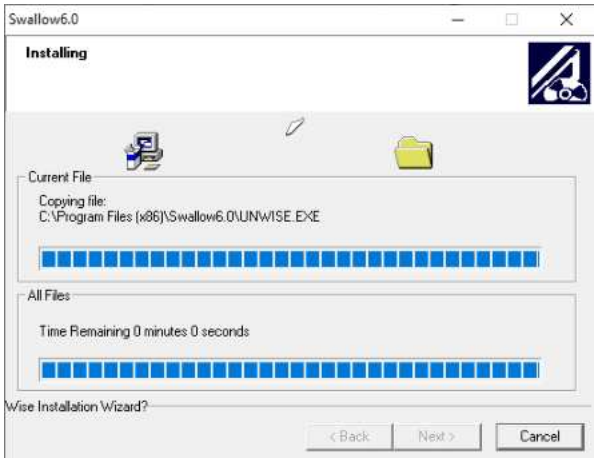

Interface for control installation process

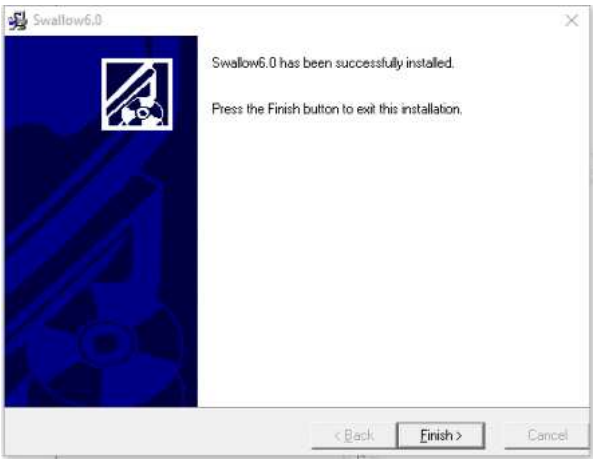

Interface for completing control installation

After the plug-in is installed successfully, refresh the browser to display the preview image.

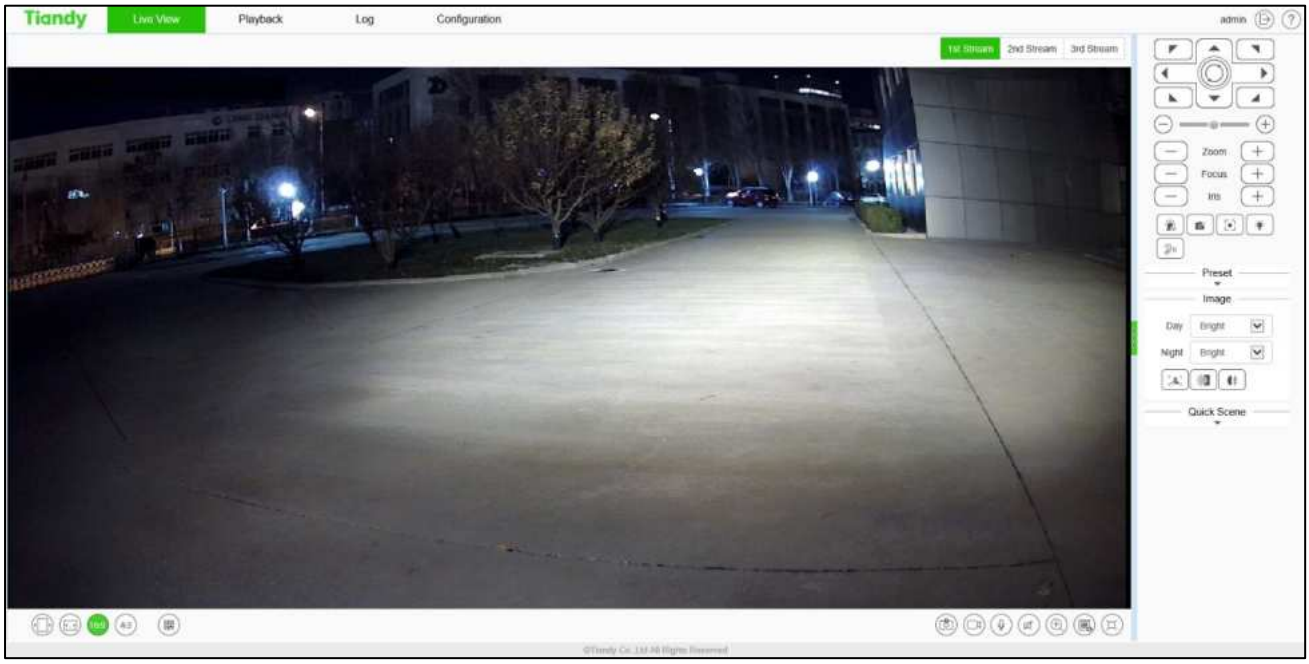

Preview interface

After logging in to the equipment, click the icon at the top of the interface to switch to different interfaces or execute related commands.

Icon	Description
Live View	Click this icon to enter the interface of “Live View”.
Playback	Click this icon to enter the interface of “Playback”.
Log	Click this icon to enter the interface of “Log”.
Configuration	Click this icon to enter the interface of “Configuration”.
EW	Click this icon to enter the "EW" interface. (supported by some models)
admin	Display the user name for this login. (This icon can only be displayed but not be clicked)
	Click this icon to log out.
	Click this icon for online help information. (supported by some models)

After you log in to the system, the prompt box of "change password" will appear in the lower right corner of the desktop. Please click the text in the box, link to the user management interface, select the user, and click "edit", as shown in the figure below.

Note: In order to ensure the security of your information, please be sure to change the initial password!

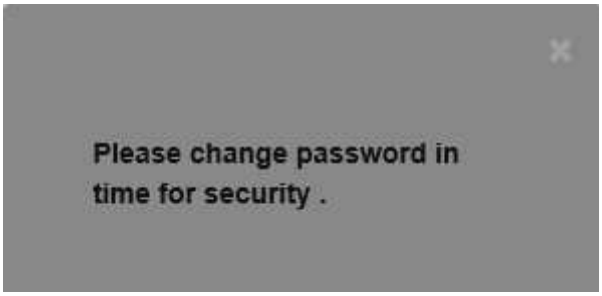

Change password prompt box (supported by some models)

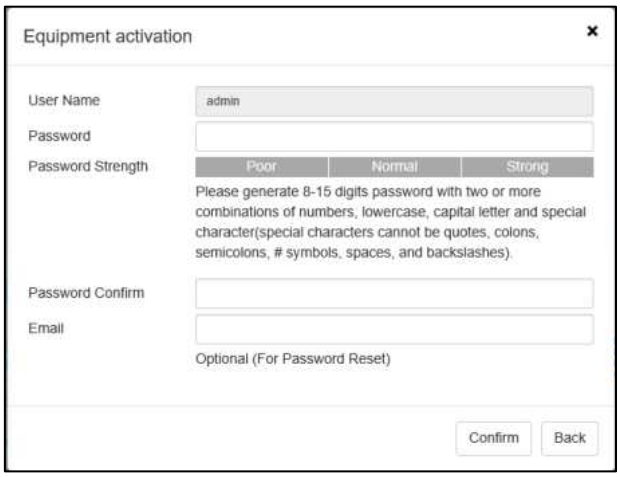

User management interface

5.4 Live View interface

After successful login, the system will display the [Preview] interface by default. In other interfaces, users can return to the video preview interface by clicking the [Preview] button at the top of the interface.

Because different models support different functions, the interfaces may also be different, please refer to the actual interface.

Live View

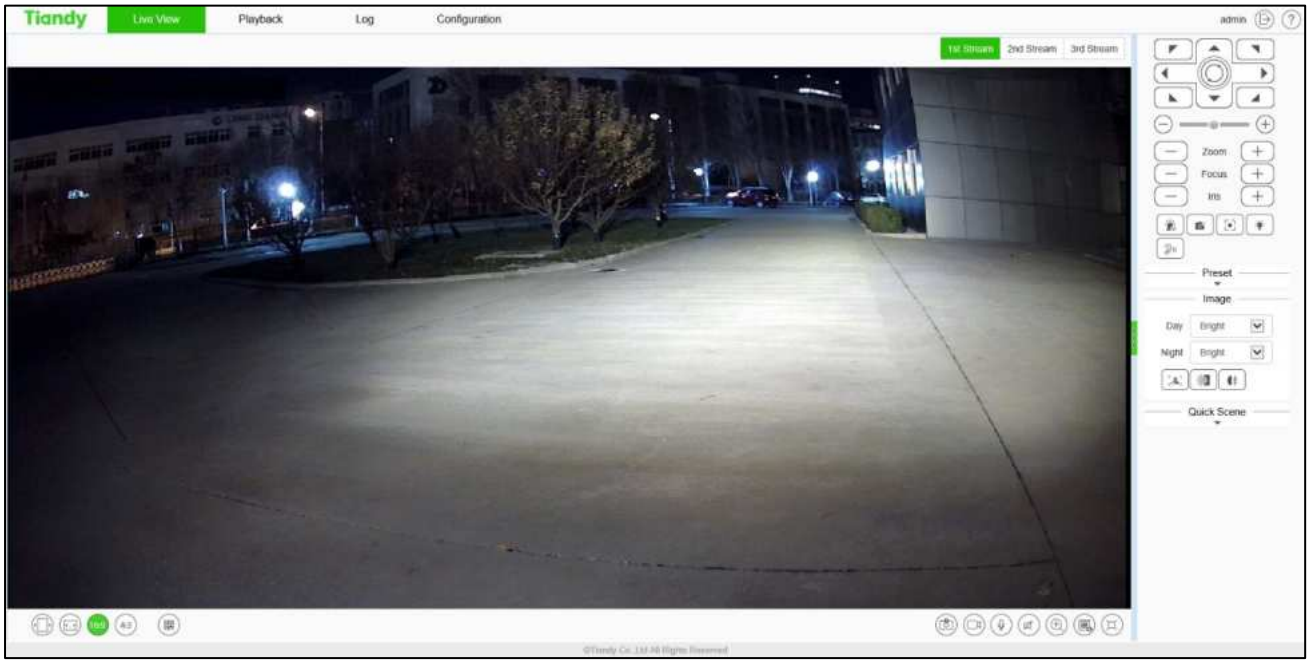

Preview interface

Description:

(1) Double-click the video to display it in full screen. Double-click again or press the [Esc] key of keyboard to exit the full screen;

(2) Introduction to the functions of keys at the preview interface:

Icon	Description
1st Stream	Click “1st Stream”; the video window will display the primary code stream, and the primary code stream will be displayed by default.
2nd Stream	Click “2nd Stream”; the video window will display secondary code stream after selection.
3rd Stream	Click “3rd Stream”; the video window will display third code stream after selection. (supported by some models)
	Click enable , when selected, the video window will display 1 screen. (supported by some models)
	Click enable. After selection, the video window will display 2 pictures. (supported by some models)
	Click “Fixed Ratio”; the video will be displayed at a fixed scale.
	Click “Fit Window”; the video will automatically adapt to the computer resolution display.
	QR code button. QR code will appear after clicking it. Users can scan the QR code according to the type of mobile phone and download the mobile client. A third QR code will appear after the equipment is connected to the public network, and you can add the equipment by scanning on the mobile client. (Supported by some models)
	Local manual snapshot control button, click enable to snapshot and save the preview picture locally, the storage path of the snapshot file can be modified by itself, the modification page: configuration system settings local settings preview snapshot save path.
	Local manual recording control button, click enable, start local recording after enabling, the storage path of recording file can be modified by

Icon	Description
	itself, modification page: configuration - system settings - local settings - saving path of recording file.
	Voice intercom switch. When enabled, it can transmit local audio to the front-end equipment through the network for output.
	Audio preview volume adjustment button, the local output volume can be adjusted by adjusting the slider position.
	Electronic zoom button. After enabling this function, click the left mouse button to draw the area to be enlarged, and then you can zoom in and view the area. (Supported by some models)
	Displays the frame rate button. After clicking, the preview interface displays the frame rate information of the current video. Click again to cancel the display of frame rate information. (supported by some models)
	Full screen button. Realize full screen preview video, double click left mouse button or press the [Esc] key of keyboard to exit full screen preview video status
	Display the target information button, click to recognize the face.
16:9	Video display in proportion 16:9.
4:3	Video display in proportion 4:3.

Caution

(1) All icons are valid when pressed.

(2) When there is no video in the interface, the audio preview is invalid.

(3) Talk can only be conducted with one user at the same time, and it is recommended to turn off the intercom in time after completing the talk, so that others can use it.

Live View - > control menu

Note: click the arrow on the right side of the video window to display / hide the control interface.

Live View - > control menu - > Pan/Tilt

This function is only supported by the equipment with 485 control. The functions supported by different models are different, please refer to the actual interface.

Icon	Description
	8 direction keys, press the corresponding direction key to control the pan tilt to rotate in the corresponding direction; the center button is the scan shortcut key, press center button can invoke scan 1.
	The slider can adjust the rotation speed of the device. The closer the "-" end is, the slower the speed is, and the closer the "+" end is, the faster the speed is.
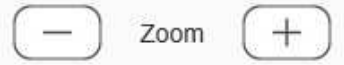	Zoom control button, press "-" control device to perform zoom operation, the field angle becomes larger and the scenery becomes smaller; press "+" control device to perform zoom operation, the field angle becomes smaller and the scenery becomes larger. (this button can also control the electric lens for zooming)
	Focus control button, press "-" control device to perform focusing near operation, the near scene is clear and far away fuzzy; press "+" control device to perform focusing far operation, the far scene is clear and near fuzzy. (this button can also control the electric lens to focus)
	Iris control button, press "-" control device to perform aperture reduction operation, and press "+" control device to perform iris increase operation. (supported by some models)
	The wiper control button supports the wiper device. Click the button and the wiper will perform an operation. In order to prolong

Icon	Description
	the service life of the wiper, the wiper is equipped with low temperature protection measures, and the function of closing when the ambient temperature is lower than 0 ℃.
	Alarm removal button. Alarm can be removed after pressing the button. (Supported by some models)
	Flip: control the video image to flip 180 °.
	Snap button: press the button to turn on the front end interception function.
	Key focus, the device automatically completes the focus operation. (supported by some models)
	Strong light warning button, click enable, the strong light will turn on after enabling, and then click again, the strong light will turn off. (supported by some models)
	Sound warning button. Click “Enable”, and play the alert tone after enabling. (Supported by some models)
	Display the target information button, click to recognize the face.

Live View - > control menu - > Preset

Description:

The preset position function is that the device can store the horizontal angle, tilt angle, focal length and other position parameters of the PTZ in the current state into the memory, and can quickly call these parameters and adjust the PTZ and the camera to the position when necessary. Only supported by RS485 controlled cameras. Enter the preset number, and click the Find button to select the preset operation, including the [set] and [call] operations.

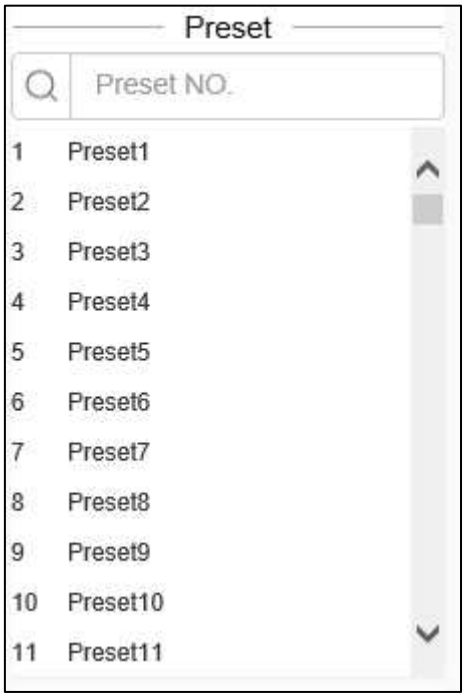

Preset position interface

(1) Click [Preset] to open or hide the parameter setting page.

(2) [Set]: Control the PTZ to move to the specified position, enter the preset position number in the blank field, click the button , and then click the button to add the corresponding preset position successfully; support to add multiple preset positions.

[Call]: Enter the preset position number in the blank field, click the button , and then click to call the corresponding preset position, and control the PTZ to move to the specified preset position.

Live View - > control menu - > Image

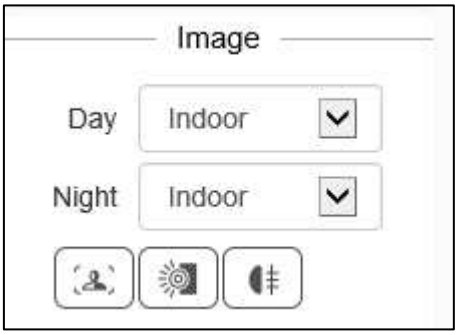

Image parameter setting interface

(1) Click [Image] to open or hide the parameter setting page.

(2) Adjust video parameters such as brightness, contrast, saturation and hue by means of adjusting corresponding slider.

(3) If you need to restore all video parameters to the default state, you can click the [Restore Default] button .

50	Brightness adjustment: adjust the slider position to change the brightness of the image.
50	Adjust the contrast, adjust the slider position to change the image contrast.
50	Adjust the saturation, adjust the slider position to change the image saturation.
50	Chroma adjustment: adjust the position of the slider to change the Chroma of the image.
Day Indoor	HD effect adjustment, adjust the daytime image effect. It support indoor, outdoor, traffic, WDR, motion, bright, colorful and customized.
Night Indoor	HD effect adjustment, adjust the nighttime image effect. It support indoor, outdoor, traffic, WDR, motion, bright, colorful and customized.
	Fog transmission function button. Press the button to turn on the fog transmission function. (Supported by some models)
	Glare suppression function button. Press the button to turn on glare suppression. (Supported by some models)
	Wide dynamic function button. Press the button to turn on wide dynamic. (Supported by some models)
	Restore default button. Button press the video parameter to restore the default value. (supported by some models)

Live View - > control menu - > Quick Scene

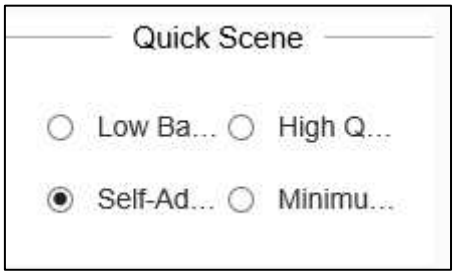

Quick scene setting interface

Click quick scene to open or hide the parameter setting page. The following can be adjusted through this interface.

Low Ba... High Q...	According to the specific situation of network environment, choose the appropriate preview mode from [Low Bandwidth] and [High Quality].
Self-Ad... Minimu...	According to the network environment of equipment transmission, two transmission modes can be selected, i.e., [adaptive] and [shortest delay]. In the case of limited network bandwidth, it is suggested to choose adaptive mode to ensure smooth image; in the application environment with high video quality requirements, it is suggested to choose the shortest delay transmission mode.
TCP UDP MUC	Protocol type: TCP, UDP, MUC, use the specified protocol to connect video. (supported by some models)

5.5 Playback

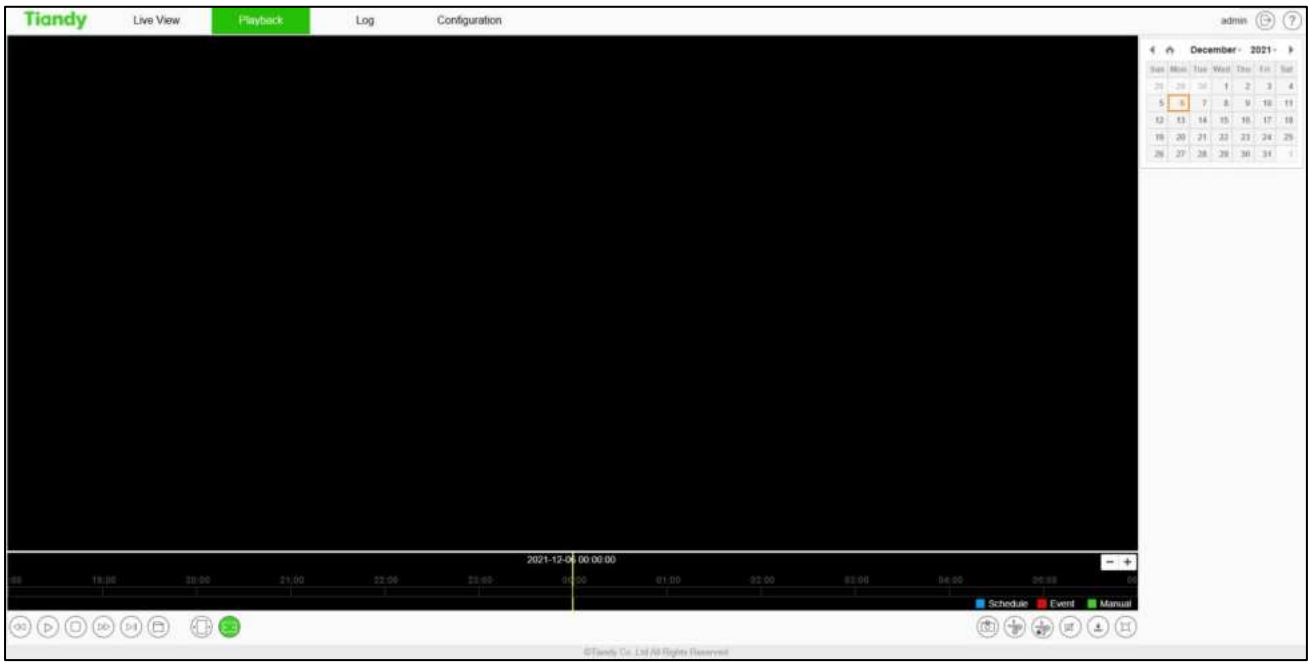

Playback interface

Click [playback] to enter the [playback] interface. In the playback interface, the user can view the video files of the specified date, and can also snapshot and clip the video. See the following table for basic operation:

Icon	Description
	Channel management, click the channel number to view the corresponding channel video. (supported by some models)
	Slow forward button. The speed is 1/2 X, 1/4 X, 1/6 X and 1/8 X.
	Play / pause button. Click to start/stop playing video file. Double speed playback will be canceled if necessary.
	“Stop Playing” button. You can stop playing the current file by clicking it.
	Fast forward button. The speed is 2 X, 4 X, 6 X and 8 X.
	Stepping button can playback the video in a single frame.
	Browse button, select the video file to play.
	Video display in fixed proportion.

Icon	Description
	Video display adapts to the resolution ratio of computer automatically.
	Playback clip button: Click to start the clip, and click again to finish the clip. The default saving location is C: \ users \ John \ netvideobrowser \ snapshotpictures \.
	Clip Management: you can view the type of video clip, video clip progress, current status and other information.
	Volume adjustment button, the local output volume can be adjusted by adjusting the slider position.
	Download Management: query or download videos and pictures.
	Full screen play button: in full screen mode, double-click the mouse again at any position to exit from full screen mode.
January 2020 Sun Mon Tue Wed Thu Fri Sat 29 30 31 1 2 3 4 5 6 7 8 9 10 11 12 13 14 15 16 17 18 19 20 21 22 23 24 25 26 27 28 29 30 31 1	Select a date in the calendar, double-click the date, and find the qualified file according to the query criteria.

In the time axis mode, users can drag on the time axis to select and view the video files of the corresponding time. After selecting the time point, click the play button to play. The time axis can be narrowed or enlarged by click .

In file mode, users can operate according to file type, video recording type, and whether to query remotely. The specific functions of buttons in file mode are as follows:

Icon	Description
FileType Record	Set the type of file to be queried, such as [Record], [Picture], etc.
RecType All	Select the type of video file to be queried. (Supported by some models)
	Jump to the first page of query results.
	Go to the previous page of the current page.

»	Go to the next page of the current page.
>|	Jump to the last page of query results.
	Lock: the file can be locked and unlocked. When the disk is full and files need to be deleted, the locked files will not be deleted.
Start downlo...	Start downloading selected video files
Stop Downlo...	Stop the selected video file being downloaded.
FTP Download	Upload the video file to the FTP server. (Supported by some models)
Jump To	Jump to the specified page.
Back	Return to the playback interface.
Search	Query: Click to query the corresponding video information.

5.6 Log

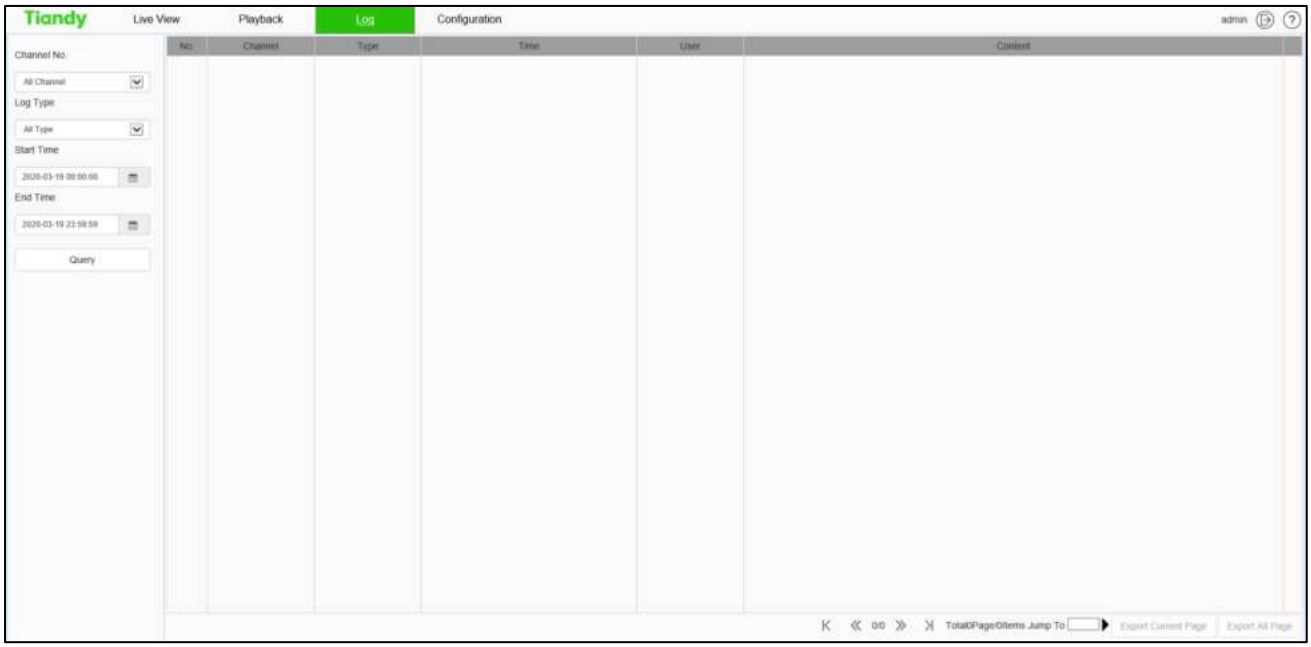

Log interface

Log interface operation instructions

(1) Select the channel number to query from the [Channel No.] drop-down list.

(2) Select the type of log you want to query from the [Log Type] drop-down list.

(3) Select the start date in the [Start Time] drop-down list, and enter the time in the edit box at the back.

(4) Select the end date in the [End Time] drop-down list, and enter the time in the edit box next to it.

(5) Click the [Query] button to query the logs within the specified time range.

(6) When there are many logs, you can use [First Page], [Pre Page], [Next Page], [Last Page] in the lower right corner to turn pages to view the logs, or enter the page number to view directly in [Jump To] to jump to the specified page.

(7) Click [Export Current Page] to export the log of current page to PC.

(8) Click [Export All Page] to export all the logs found to the PC.

5.7 Configuration

After login, [preview] will be displayed by default. Click [configure] in the menu bar at the top of the page to enter the parameter configuration page, where you can set common settings, audio and video parameters, network settings, intelligent analysis, storage settings and system settings.

Note:

Because different models support different functions, the interfaces and menus may also be different, please refer to the actual interface

5.7.1. Basic Set

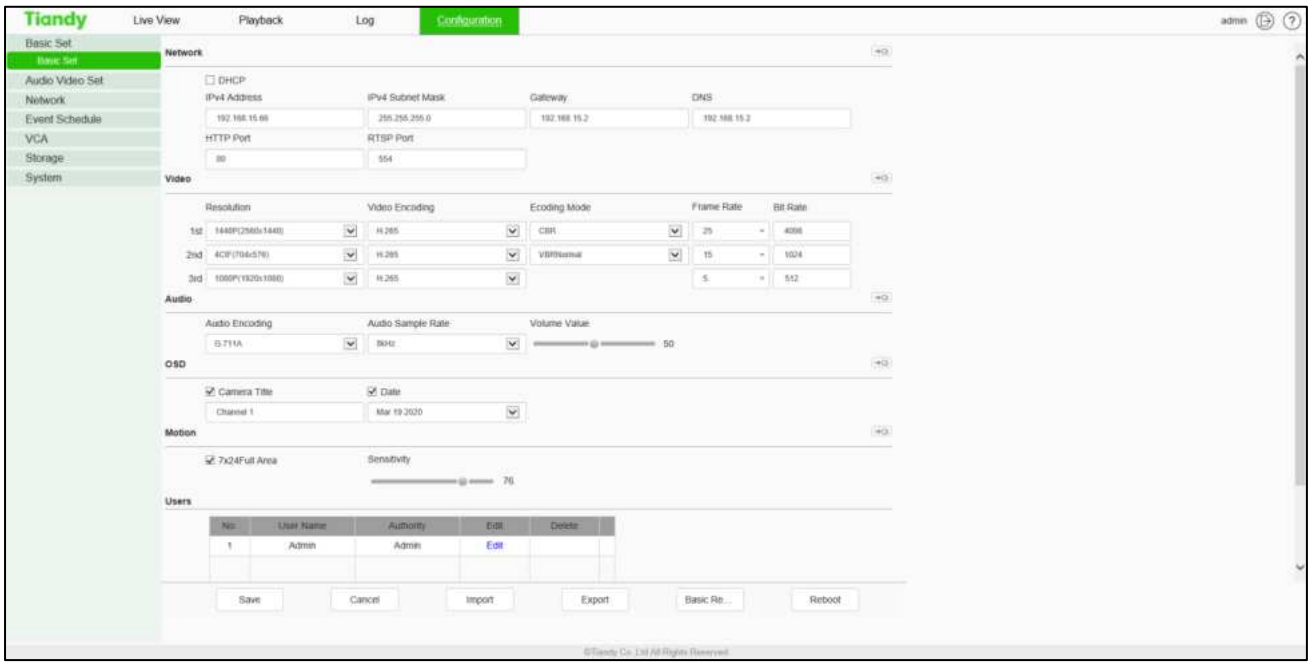

Basic Set interface

Basic Set - > Network

[DHCP]: when checked, the DHCP server will automatically assign IP to the device.

[IPv4 Address]: set the IP address of the device.

[IPv4 Subnet Mask]: set the subnet mask of the device.

[Gateway]: set the gateway of the device.

[DNS]: set the DNS server address.

[HTTP Port]: enter [HTTP port number] in the input box on the page, restart the device, and then modify the HTTP port number.

[RTSP Port]: enter [RTSP port] in the input box on the page, restart the device, and then modify the RTSP port number.

[More...]: Click to jump to the network setting interface.

Basic Set - > Video

[Resolution] set the resolution, which is divided into main stream, sub stream and three stream

[Video Encoding] set the video coding mode, which is divided into main code stream, sub code stream and three code streams

[Ecoding Mode] set the coding compression mode, which is divided into main code stream, sub code stream and three code streams

[More...]: Click to quickly jump to video settings

Basic Set - > Audio

[Audio Encoding] set the audio coding mode

[Audio Sample Rate] set the audio sampling rate

[Volume Value] set the volume of audio input

[More...]: Click to quickly jump to audio settings

Basic Set - > OSD

[Channel Title] set the character overlay name of the channel. If it is checked, it means display; if it is not checked, it means display

Set the time and date display format in [Date]. If checked, it means display; if unchecked, it means display

[More...]: Click to quickly jump to character overlay settings

Basic Set - > Motion

Check [7x24 Full Area] to set full time mobile detection alarm

[Sensitivity] set the sensitivity of motion detection

[More...]: Click to quickly jump to mobile alarm

Basic Set - > Users

[New]

To add a new user, you need to set the user name, password and permission. The user name and password can only be entered in English letters and numbers. After the above three items are filled in, click the [Save] button.

Note: only users with administrator rights can add and modify users.

[Edit]

In the user list, click [Edit] to open the password modification prompt box, input the old password,

new password and confirm the password, and then click Modify.

[Remove]

In the user list, click [Remove] to open the prompt box and click OK.

Other buttons

Click the [Save] button to save and make it take effect.

Click [Cancel] to restore the last saved parameter.

[Import]/ [Export]: used for equipment maintenance, mainly divided into three categories:

(1) [Event Server] options include alarm time period and linkage item setting information, excluding intelligent analysis.

(2) [Smart Analytics] options include settings related to intelligent analysis, including rules, time periods, etc.

(3) [System Setting] options include all setting information except the above alarm and intelligent analysis, including character superposition, video recording strategy, network setting and other information.

[Basic Reset]: restore the default parameters of the device. (key information such as IP address will not be recovered)

[Reboot]: restart the device.

5.8 Audio Video Set

5.8.1. Stream

Stream- > Stream

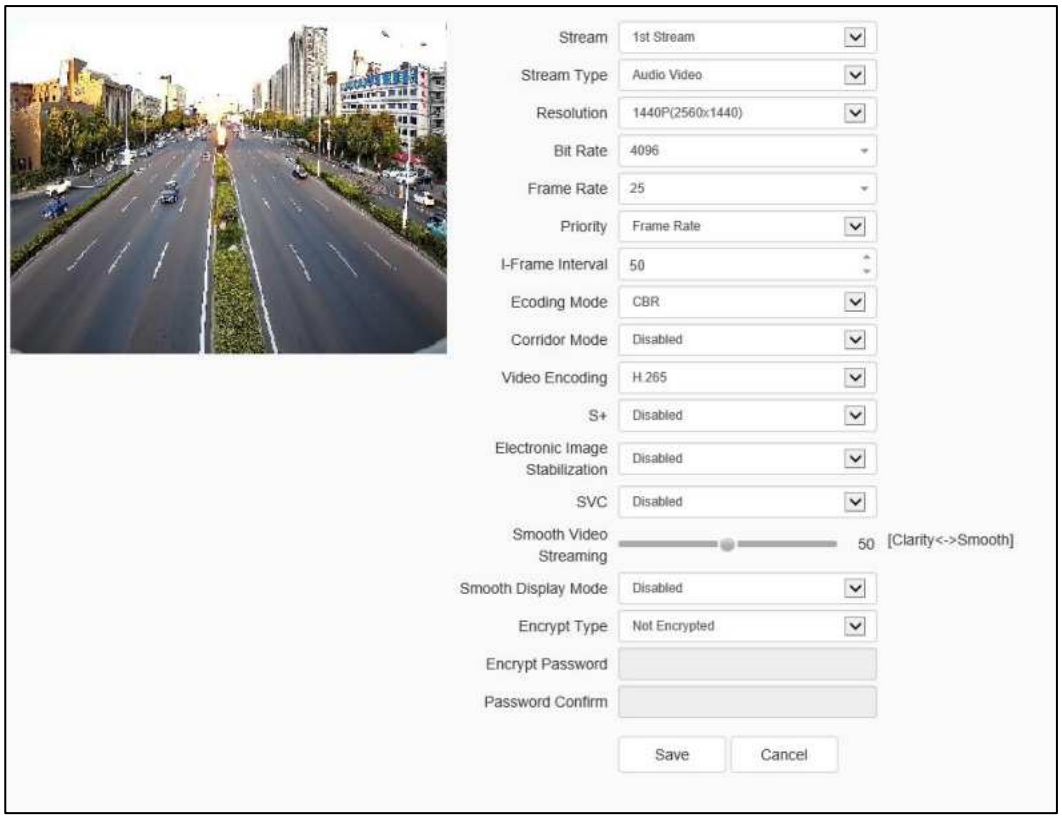

Stream - Stream interface

Parameters	Description
Channel	Select the channel for which video parameter information needs to be set. (Supported by some models)
Stream	The video related parameters of the main stream, the sub stream and the third stream can be modified. Select the corresponding code stream of the family and modify the parameters of the corresponding code stream
Stream Type	You can choose pure video or audio video.
Resolution	Set the resolution of the video. (Different models are compatible with different maximum resolutions).
Bit Rate	Set the bit rate of the video in KB / s. Code rate range: 32 ~ 16384kb / s. Tip: select the required resolution from the [resolution] drop-down list, and the code stream can be switched to the specified[code rate]. When [compression method] is [constant rate], the [code rate] represents the actual code rate of the code stream; when [compression method] is [variable rate], the [code rate] represents the maximum allowed code rate of the code stream.

	(Different models support different code rates, please refer to the actual interface)
Frame Rate	Sets the frame rate of the current video. In the [PAL] system, some models support 50 frames, and the maximum support is 25 frames when the wide dynamic mode is turned on. [NTSC] under the system, some models support 60 frames, and when the wide dynamic mode is turned on, the maximum support is 30 frames.
Priority	The video set to [frame rate first] is smoother and the video set to [quality first] is clearer.
I-Frame Interval	The number of frames between every two I frames can be set, and the range can be 10-100.
Ecoding Mode	Set constant rate or variable rate compression. At the fixed bit rate, the amount of video data fluctuates little, and the bandwidth occupied by the network transmission is stable; at the variable bit rate, the amount of video data changes with the complexity of the video picture, and the bandwidth is saved when the scene is single. In the case of variable bit rate, there are several levels. If the better, the higher the average bit rate is.
Corridor Mode	The screen is rotated 90 degrees to adapt to the scene where the device is installed on the wall. It is off by default.
Video Encoding	Set how video is encoded. H. 265 encoding saves bandwidth, but some browsers or playback software do not support h.265.
S+	Switch S + on and off can be selected from the drop-down list. When S + is enabled, functions such as compression mode, video quality, I-frame frame rate and key area will not be available.
Electronic Image Stabilization	According to the actual situation, user can select [On] or [Off] to optimize the picture quality and prevent shake. (Supported by some models)
SVC	When [SVC] is turned on, P frame can be encoded as non reference frame, which can be used for frame extraction video recording and save storage space. The video file after frame extraction still supports normal decoding. When the [auto] mode is selected, the device will adapt to the current network environment and decide whether to send the frame to ensure that the image can be previewed normally during preview. (supported by some models)
Smooth Video	The ratio of I frame and P frame can be set. The closer to smoothness, the better the

Streaming	smoothness of dynamic scene, the closer to clarity, and the better the video clarity performance of static scene.
Smooth Display Mode	Set whether to turn on unobstructed mode. (supported by some models)
Encrypt type	According to the situation, users can encrypt video data to improve the security of network transmission. [Encrypt type] select the required encryption algorithm (currently only AES algorithm is available), [Encrypt password] set the encryption password, and [password confirmation] input the encryption password again to ensure that the password entered twice is the same. Click [Save] to take effect.

After setting, click Save to take effect. Click [reset] to restore the last saved parameter.

Stream - > Key Region

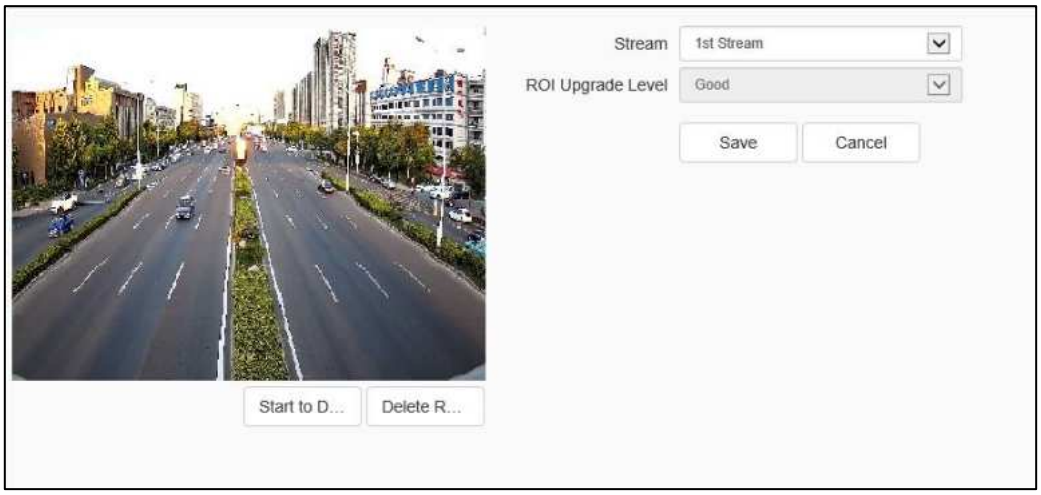

Video parameters key area interface

After the front-end connection supporting the key area setting, you can set the key area here. The image quality displayed in the focus area is higher.

(1) Click the "Start to Drawing" button to drag the video by holding down the left mouse button, and then you can set the key area. Several key areas can be set up. Click "Delete Area" to delete all the key areas that have been set.

(2) Click [Save] to save the corresponding parameter settings. Click [Cancel]to restore the last saved parameter.

Parameters	Description
Stream	Set the bitstream of the application focus area.

Parameters	Description
ROI Upgrade Level	Set the promotion level of videos in key areas.

5.8.2. Audio

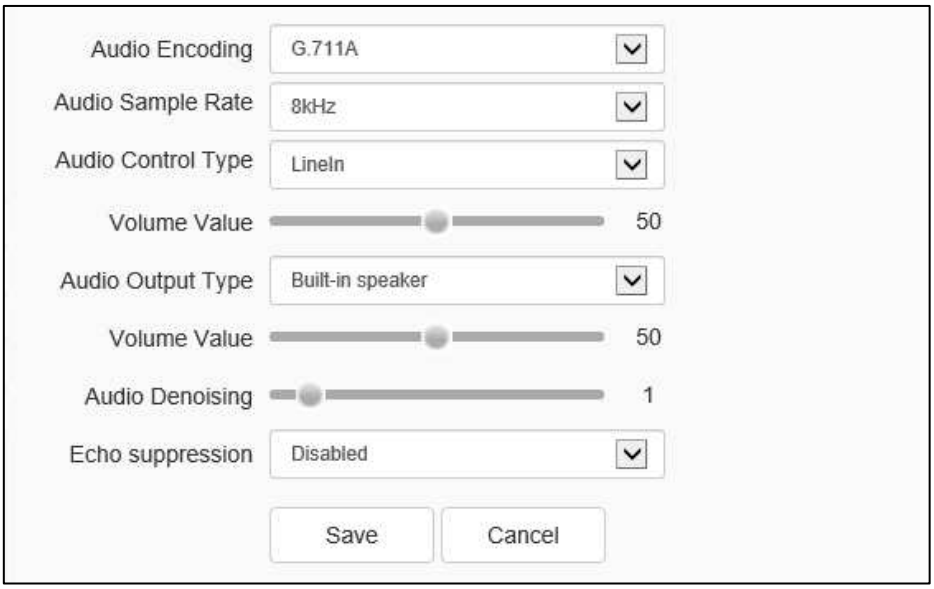

Interface of audio parameter setting

Parameters	Description
Audio Encoding	Set the audio encoding mode of the bitstream.
Audio Sample Rate	Sets the audio sampling rate for the bitstream.
Audio Control Type	It supports two modes: linein and micin. The control mode needs to be selected according to the output signal amplitude of the external audio equipment. When the external mic small signal (mv level signal) is connected, please select micin; when the external equipment is the active audio equipment (V level signal), please select linein mode. (supported by some models)
Volume value	The output sound size can be adjusted, and the adjustment range is 0-100. The smaller the value is, the smaller the output audio signal amplitude of the device is; the larger the value is, the larger the output audio signal amplitude of the device is.

Parameters	Description
Audio Denoising	The filter level of environmental noise can be set. The default level is 1. When the value is 0, turn off the audio noise reduction function. (supported by some models)
Audio Output Type	The audio output type includes built-in speaker, external sound source and off. When the built-in speaker is selected, the output volume can be adjusted. (supported by some models)
Echo Suppression	Turn on to improve the quality of audio intercom. (supported by some models)

After setting, click Save to take effect. Click [reset] to restore the last saved parameter.

Note:

(1) To modify the audio parameters, the intercom function needs to be turned off.

(2) Modify the audio coding mode and audio sampling rate parameters.

5.8.3. Image Setting

Image Settings - > Image

The applications of HD parameters are reflected in the form of templates, and the system provides several sets of commonly used templates for use. The HD parameters of each template are independent of each other, and the parameters of the second template will not be affected after modifying the HD parameters of the first template, so please confirm the current template before modifying the parameters.

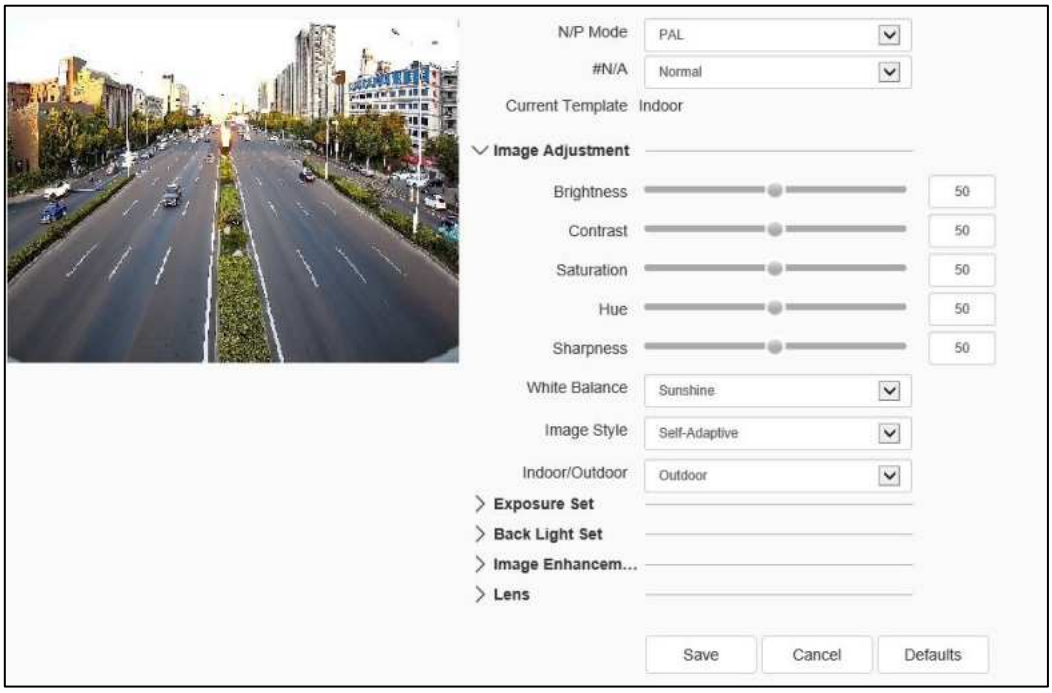

Image interface

Image - Template Selection

In [Current Template], select the template to modify the parameter. In [template name], you can define the template name.

Set image display effect in [[format]], PAL and NTSC can be chosen.

Select the method to display image mirror in [[Image location]]. Four methods to display image position are supported: horizontal mirror, vertical mirror, inverted flip, normal, and so on.

Image -Image Adjustment

Click > next to [Image Adjustment] to expand the [Image Adjustment] interface. The user can set the brightness, contrast, saturation, hue, sharpness, white balance, image style and indoor/ outdoor modes of the picture through the image adjustment menu.

Image –Exposure Set

Click the > button next to [Exposure Set] to expand the [Exposure Set] setting interface.

Parameters	Description
Shutter speed	You can set the maximum exposure time allowed to affect the brightness of the image. If the exposure time is too long, the moving image will be dragged, and if the exposure

	time is too short, the video picture will be darker.
Automatic gain	The maximum gain allowed can be set to affect the brightness of the image. Too much gain may produce more noise.
Smart IR	It works in IR camera models, when image overexposure, turn on [Smart IR]. Camera will turn down the brightness to avoid not see object cause of overexposure.
Maximum / minimum exposure time	The longer exposure time is, the brighter photos will be and the more noisy points will be.
Gain adjustment	The compensation of luminance at low illumination level can be modified by adjusting gain. The larger gain is, the more illumination increase will be and the larger noisy points will be.
Brightness	Setup brightness value.
Auto Exposure Speed	Adjust the scroll bar to set the exposure sensitivity. The higher the value is, the faster the exposure response will be when the scene changes.

Image –Back Light Set

Click the “ > ” button next to [Backlight] to expand the [Backlight] setting interface.

Parameters	Description
HLC	It is mainly used in road monitoring scenes. It can suppress the glare such as car headlights after being turned on, thus reducing the effect of glare.
Super-Wide dynamic Grade	In the drop-down list, there are [off], [ultra wide dynamic auto], [ultra wide dynamic manual] and backlight compensation options. Select [ultra wide dynamic auto] or [ultra wide dynamic manual] to display the [ultra wide dynamic] slider. Drag the slider to set the wide dynamic level that meets the requirements of the scene. The larger the value, the more obvious the effect. Select [backlight compensation] and check [set backlight compensation area] and click Save to set light compensation and improve the brightness in the setting

	area

Image - Image Enhancement

Click the > button next to [Image Enhancement] to expand the [Image Enhancement] setting interface.

Parameters	Description
Defog	Select [Enabled], [Disabled] and other options according to actual needs.
Digital Noise Reduction	In the drop-down list, you can select [close], [normal mode] and [expert mode]. Select [normal mode], display the [noise reduction level] slider, and drag the slider to set the noise reduction level. Select [expert mode], and the sliders of [airspace noise reduction level] and [time domain noise reduction level] will pop up respectively. Drag the two sliders to set [airspace noise reduction level] and [time domain noise reduction level] respectively.

Note:

After the HD parameters are set, click[Save] to save. Click [Cancel] to restore the last saved parameter. [Defaults]: the parameters of each template can be restored to the default settings.

Image settings - > Schedule

Schedule interface

Users can use different templates for equipment at different time periods by means of using HD template, to ensure that the effects of videos are the best in different time periods.

[Day]: Set the HD template during the day.

[Night]: Set the HD template at night.

Click the [Save] button to save and make it take effect.

Image settings - > Day/Night

Day/Night setting interface

In the color to black interface, set the device to switch to day or night mode according to the specified conditions, and set the fill light.

[Color to B/W Type]: allows [device] to switch between day and night modes according to different rules. Because the functions of different models are different, please refer to the actual interface.

[Auto (inside)]: in the internal synchronization mode, the [device] will automatically detect the brightness of the video screen. When the video brightness is higher than the brightness value in the day, the video will change from black to color. When the video brightness value is lower than the brightness value at night, the video will change from color to black. The [real-time brightness value] above the page is the detected current brightness value.

[B/W]: the device video is always in black and white mode.

[Color]: the device video is always in color mode.

[Auto (outside)]: detect the brightness of the external environment through the photoreceptor. When the external brightness is higher than the brightness value in the day, the video changes from black to color. When the external brightness is lower than the brightness value at night, the video changes from color to black.

[Schedule]: in timing mode, you can specify the daylight time and dark time.

[Adaptive]: the device automatically switches between black and white or color mode according to the scene.

[Sensitivity]: toggle the drop-down box to select sensitivity.

[IR lamp control mode]: set the IR lamp on mode.

[Brightness of IR lamp]: slide the slider to set the brightness value of IR lamp. The maximum value is

100.

[White Light Control Mode]: set the white light on mode.

[Brightness of White Light]: slide the slider to set the brightness value of white light. The maximum value is 100.

Click the [Save] button to save and make it take effect.

Click [Cancel] to restore the last saved parameter.

5.8.4. OSD

OSD - > OSD

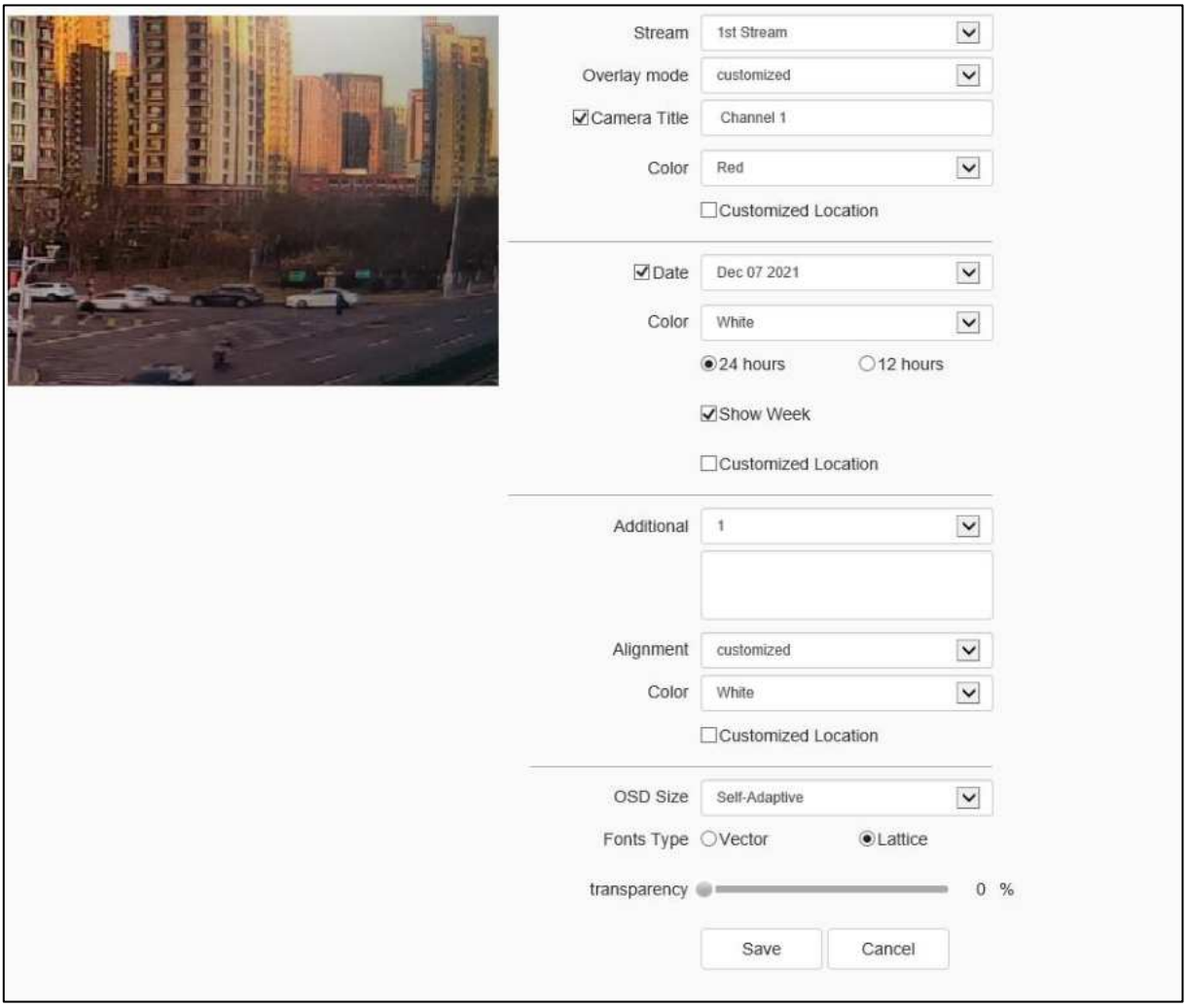

Interface of OSD

[Channel]：Select the channel for which OSD needs to be set. (Supported by some models)

[Stream]: select the code stream to stack character information.

[Overlay mode]: national standard and customized. If national standard superimposition mode is used, it is not necessary to set superimposition position. (Only for some models)

[Channel Title]

(1) Select the [Channel Title]] check box to overlay the channel name on the screen.

(2) Enter a name in the input box on the right to set the channel name.

(3) From the [Color] drop-down list, select the color you like for the superimposed content.

(4) If you need to change the position of the superimposed character, select the [user defined position] check box, and click on the small screen with the mouse to specify a new position for the superimposed character.

[Date]

(1) Select the [Date] check box to overlay the date and time on the picture.

(2) Select your preferred date format from the drop-down list on the right.

(3) If you need to include the week in the displayed time and date, select the[Show Week] check box.

(4) As required, the time can be displayed in 24-hour or 12-hour mode. Select the corresponding option from the 2 buttons below.

(5) From the [Color] drop-down list, select the color you like for the superimposed content.

(6) If you need to change the position of the superimposed character, select the [user defined position] check box, and click on the small screen with the mouse to specify a new position for the superimposed character.

[Additional]

(1) [Additional] at present, there are 5 areas for stacking.

(2) Input the text content to be superimposed from the input box below, including Chinese characters, English and common punctuation marks. You can stack multiple lines of content in one area as needed. Some models support peripheral mode. Click [insert] to add peripheral information.

(3) Choose your favored alignment mode from pull-down list [alignment mode] for content superimposition; edge distance can be adjusted for left-aligned text and right-aligned text.

(4) From the [color] drop-down list, select the color you like for the superimposed content.

(5) Select the [user defined location] check box and click on the small screen with the mouse to specify a new location for the superimposed characters.

[OSD Size]

You can specify the size of the superimposed characters, select the preferred character size (unit: pixel) in the [OSD Size] drop-down list, or select [Self-Adaptive] to let the system automatically adjust the character size.

After all the above parameters are set, click [Save] to save and take effect; click [Cancel] to restore the last saved parameters.

Note:

Quantity of extra area information which can be additionally added in each channel is set on a case-by-case basis.

OSD - > LOGO

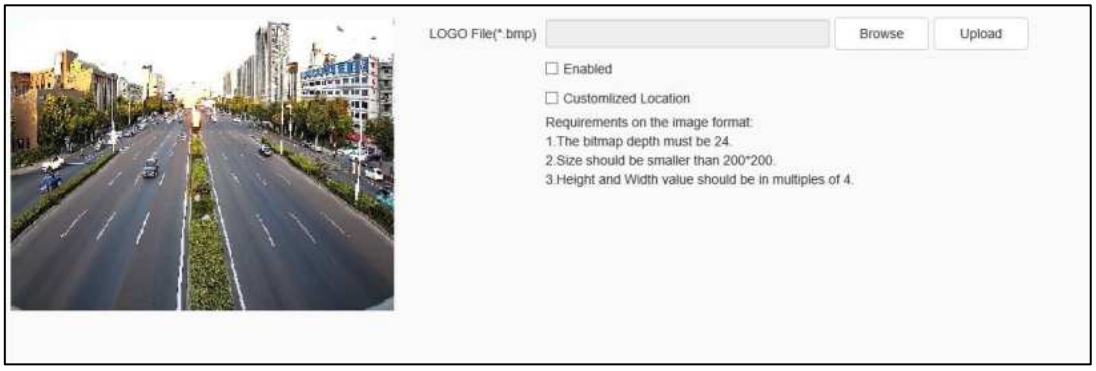

LOGO setting interface

(1) Enter the path of the image file in the [LOGO File] input box, or click the [Browse] button to find the image file in the pop-up window.

(2) After clicking the [Upload] button, the picture will be uploaded to the equipment, and the equipment will restart automatically after uploading the picture.

(3) After the equipment is restarted, select the [Enable] check box to overlay the LOGO picture on the video. If the [Enable] check box is canceled, the LOGO will not be displayed.

(4) With [Enable]selected, select the [Customized Location]check box and click on the video screen with the mouse to specify a new display location for the LOGO.

Note:

(1) The LOGO picture must be a bitmap file in bmp format. The bitmap depth is 24, the size is smaller than 200 * 200 pixels, and the height and width are divisible by 4. Please use a picture that meets the requirements.

(2) Overlapped LOGO will automatically remove its black and white background.

OSD- > Privacy Mask

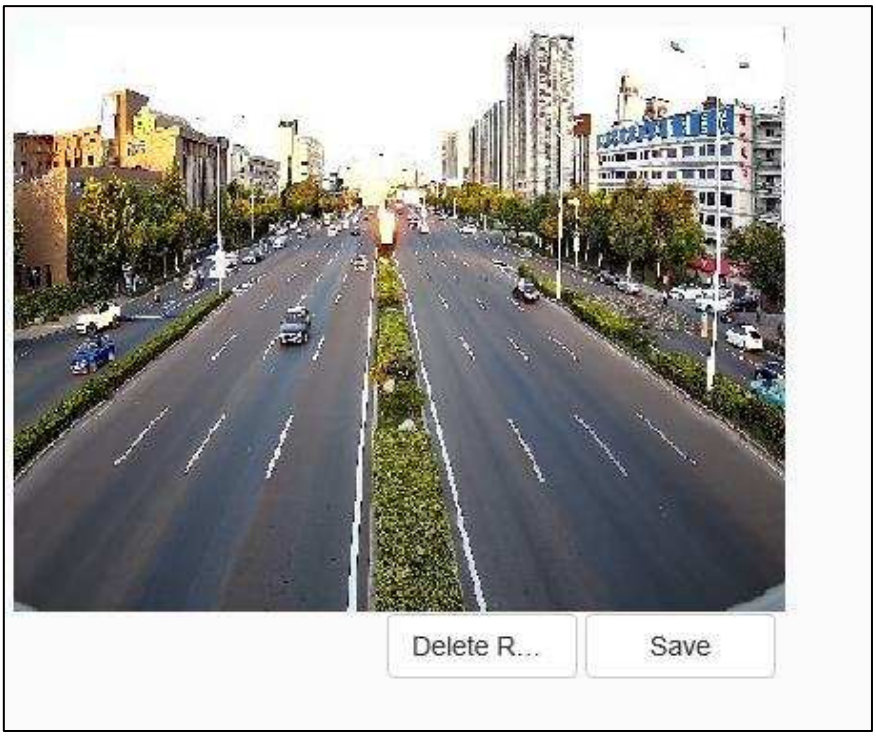

Privacy Mask setting interface

According to the user's needs, the occlusion area is set on the video screen to protect the privacy information and support multiple occlusion areas.

(1) Drag the mouse to draw the occluded area on the video screen, allowing to draw multiple occluded areas.

(2) If you need to delete the drawn area, click [Delete Region] to delete all the occluded areas, so as to draw again.

(3) Click [save] to save and take effect.

5.9 Network

5.9.1. Basic set

Basic set - > TCP / IP

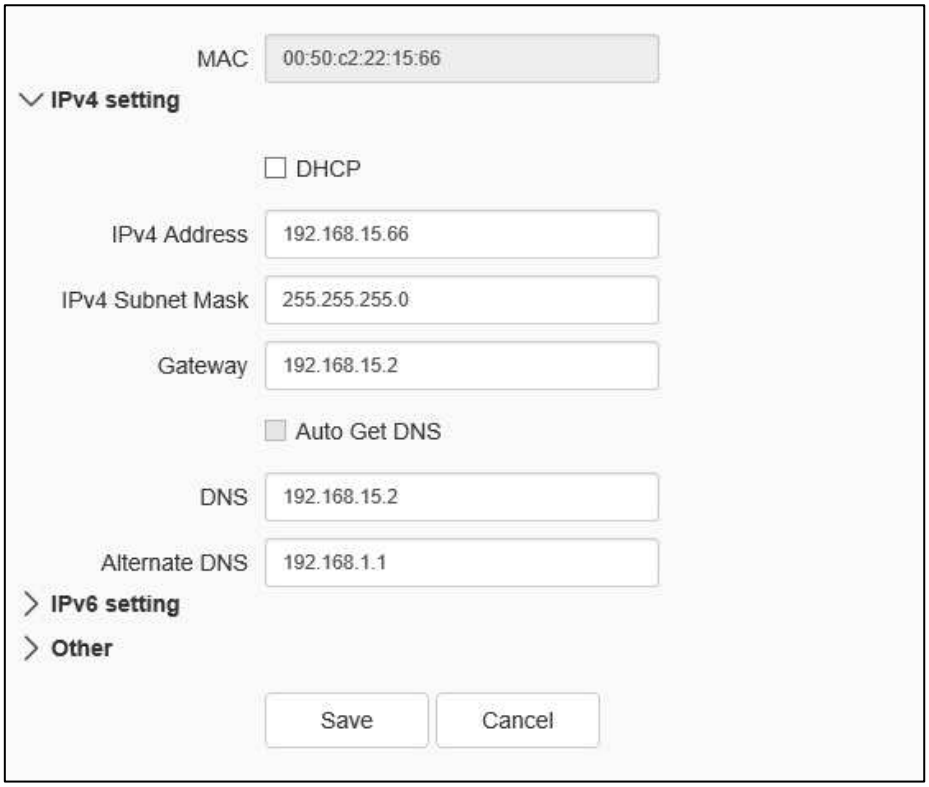

TCP / IP setting interface

[DHCP]: set whether the DHCP server automatically assigns IP to the device.

[IPv4 Address]: set the IP address, subnet mask and gateway of the device.

[IPv6 Address]: this device supports IPv6. Users can see the IPv6 address and subnet mask of the device on the page. (Supported by some models)

[DNS]: set the DNS server address.

[MAC]: displays the physical address of the device.

[MTU]: set the size of MTU, ranging from 500 to 1500, and the default is 1500. After setting, click Save to save the setting, and it will take effect after restarting the equipment.

[HTTP Port]: enter [HTTP port number] in the input box on the page, restart the device, and then modify the HTTP port number.

[RTSP Port]: enter [RTSP port number] in the input box on the page, restart the device, and then modify the RTSP port number.

[HTTPS Port]: enter [HTTPS port number] in the input box on the page, restart the device, and then modify the HTTPS port number.

[RTSP Path]: refer to the example path in the interface. Check enable intranet search to enable this function.

[Save]: save the current settings.

[Cancel]: restores the last saved parameter.

Basic Set - > DDNS

DDNS setting interface

After checking [Enabled] DDNS, select the [server address] to be set, modify equipment [Server Domain], set [DDNS Domain], [User Name], [Password]and[Password Confirm], and then click [Save] to set DDNS network server information. Click [Cancel] to restore the last saved parameter.

Basic Set- > UPnP

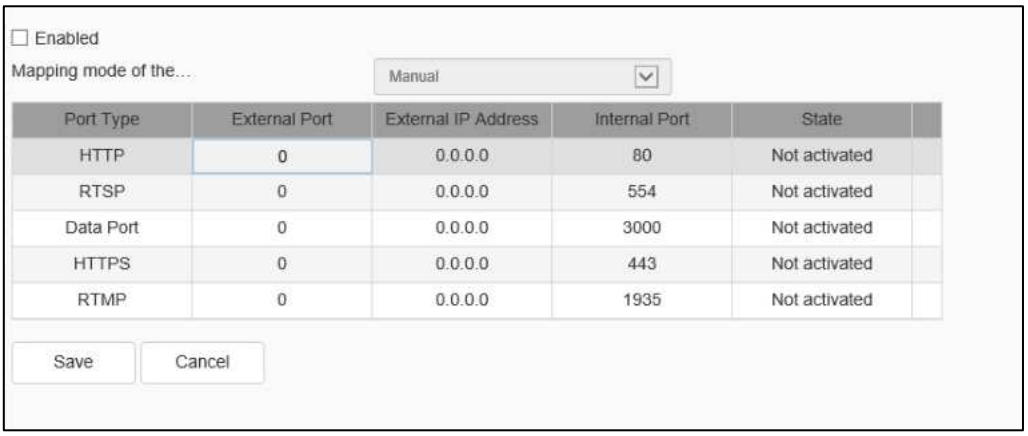

UPnP interface

Only when port mapping is enabled, can the ports of network devices be opened normally. Port mapping methods include automatic and manual.

(1) When "Auto" mode is selected and UPnP is enabled, users do not need to do port mapping on the router, only need to turn on the UPnP function on the router.

(2) Select "Manual", the user needs to manually map the port on the router. In manual mode, the user

can specify the external port to be mapped under the public IP. The user does not need to modify the port of the network device itself. If the router or gateway does not support the UPnP function, the user can fill in the current mapped external port status here.

(3) After the port mapping, the status column will show whether it is effective. At the same time, the external port under the currently mapped public IP will be displayed in the external port. If users need to access network devices through the public network, they need to use the currently mapped external port to access.

[Save]: save the current settings.

[Cancel]: restores the last saved parameter.

5.9.2. Advanced Set

Advanced Set - >IP Filter

IP Filter setting interface

IP firewall, also known as black-and-white list, is provided for users to manage access rights more flexibly.

[No Limit]: select the[No Limit] button to remove the restriction of the black and white list. All IP addresses can be accessed, not only the IP addresses in the list.

[Whitelist]: if you want to allow only a few trusted IPS to access the device, you can select the [Whitelist] button, enter the trusted IP addresses one by one, click [Add] to add to the list, and then click [Save] to make the whitelist effective. At this time, only a number of IPS specified in the list can successfully log in to the device, and login requests from other IPS will be rejected, regardless of whether their user name and password are correct or not. Users can specify up to 16 trusted IP addresses in the white list.

Note: when adding the white list, please confirm whether to add the IP address of the current user.

[Blacklist]: if you want to block some IP addresses and prohibit them from accessing the equipment, you can select the button of[blacklist], input the IP addresses you want to block one by one, click [Add]to add them to the list, and then click [Save] to make the blacklist effective. At this time, the login request from any IP in the list will be rejected, regardless of whether its user name and password are correct or not.

Note: when adding the blacklist, please confirm whether the IP address of the current user is added.

[Delete]: if you need to delete some IPS from the list, just select the check box on the left of these IPS and click [delete]. Note that all IPS cannot be deleted when deleting the white list, otherwise the device will not be able to log in successfully.

Note: IP filtering can only be judged when a user is newly logged in, and cannot filter the logged in IP. It is strongly recommended to restart the device in time after each blacklist configuration to shield the illegal IP address.

[Save]: save the current settings.

[Cancel]: restores the last saved parameter.

Advanced Set - > Email (supported by some models)

Mail setting interface

After the user enables mail, the alarm server will automatically send alarm mail to the mailbox address set by the user when an alarm occurs.

(1) The email server address input format is smtp.xx.com, where XX represents the email server and is the login email of the account, for example, smtp.163.com.

(2) The account and password are the user name and password of the login SMTP server mailbox.

(3) The encryption mode can be none, SSL or TLS.

(4) After setting the subject and CC email address, click[test]to test whether the mail server function is normal. Click [save] to save the current settings. Click [reset] to restore the last saved parameter.

Advanced Set - > PPPoE

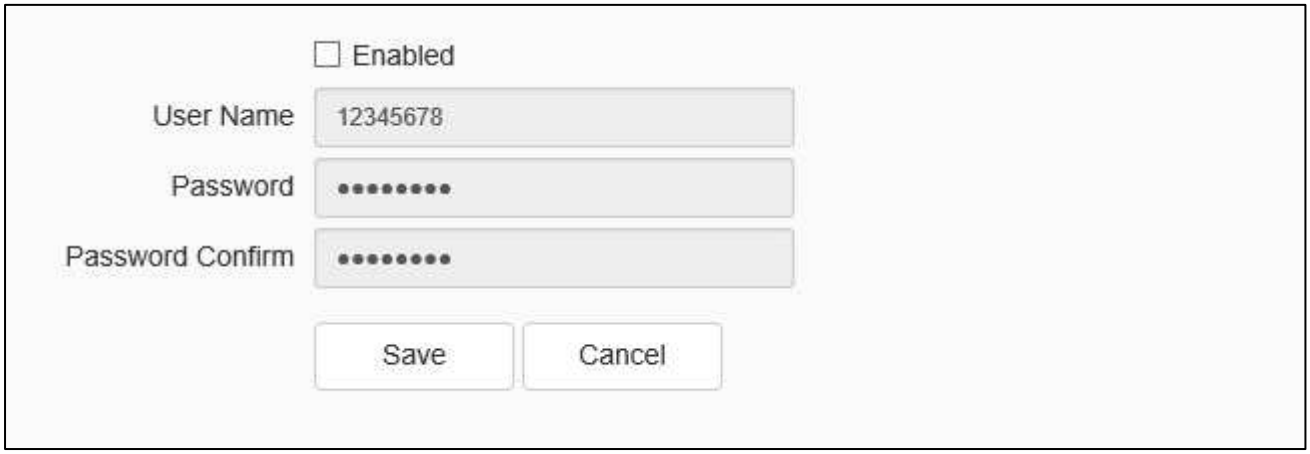

PPPoE setting interface

After enabling the [PPPoE] function, change the [User Name],[Password]and [Password Confirm], and [Save] to set the PPPoE network server information, which will take effect after restart;[Cancel]to restore the last saved parameters. (supported by some models)

Advanced Set - > SIP （GB/T set）

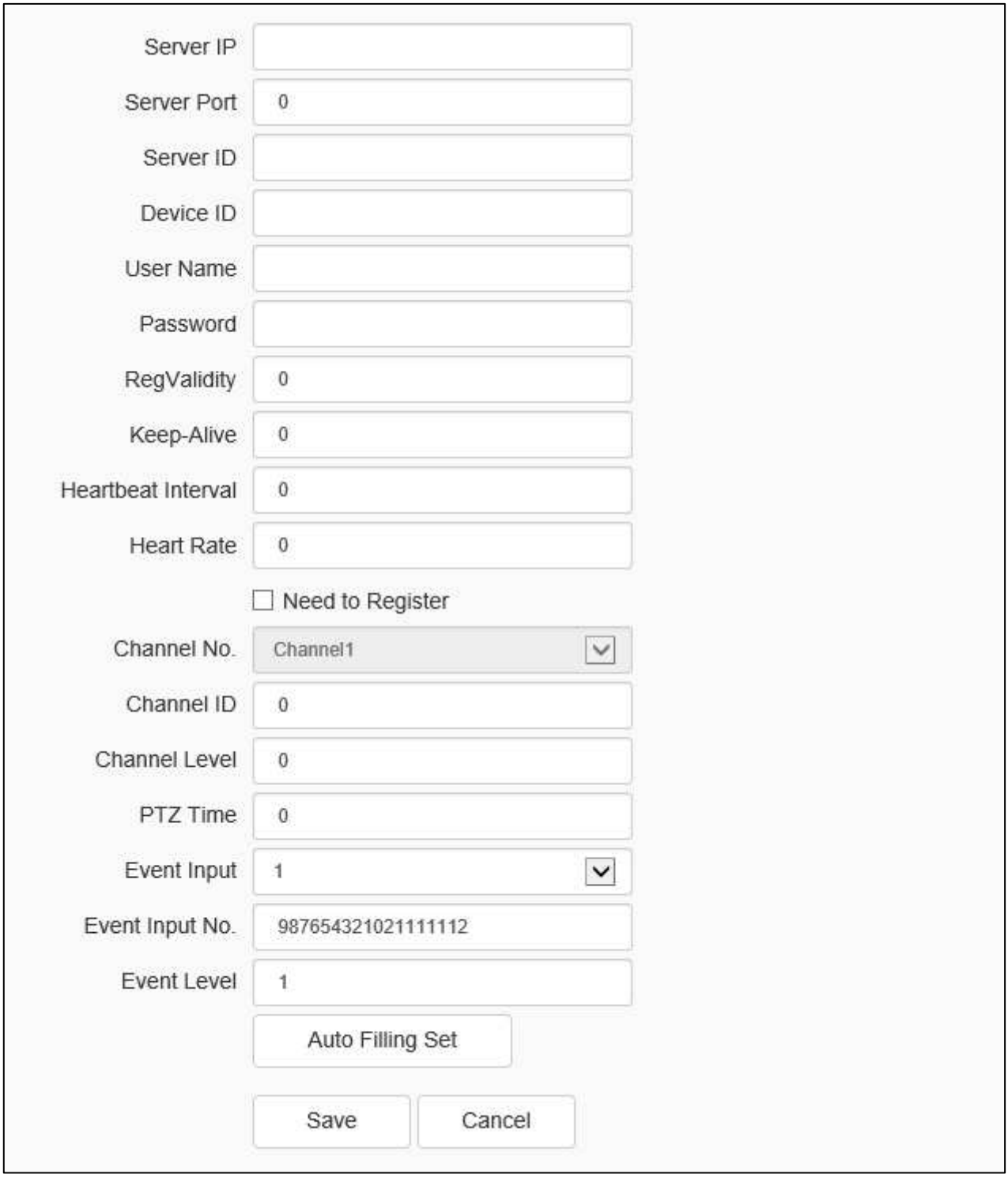

SIP（GB/T set）setting interface

The SIP protocol can be accessed to other platforms by setting corresponding parameters.

[Auto Filling Set]: click this button, the channel number and alarm input number will be increased and set from the current channel number.

[Save]: save the current settings.

[Cancel]: restores the last saved parameter.

Advanced Set - > Multicast->TS

Multicast setting interface

Input the multicast [IP Address] (range: 224.0.0.0-239.255.255.255), input the port number (range: 1-65535), and click Save to restart the device. (Supported by some models)

Advanced Set - > Multicast->RTP

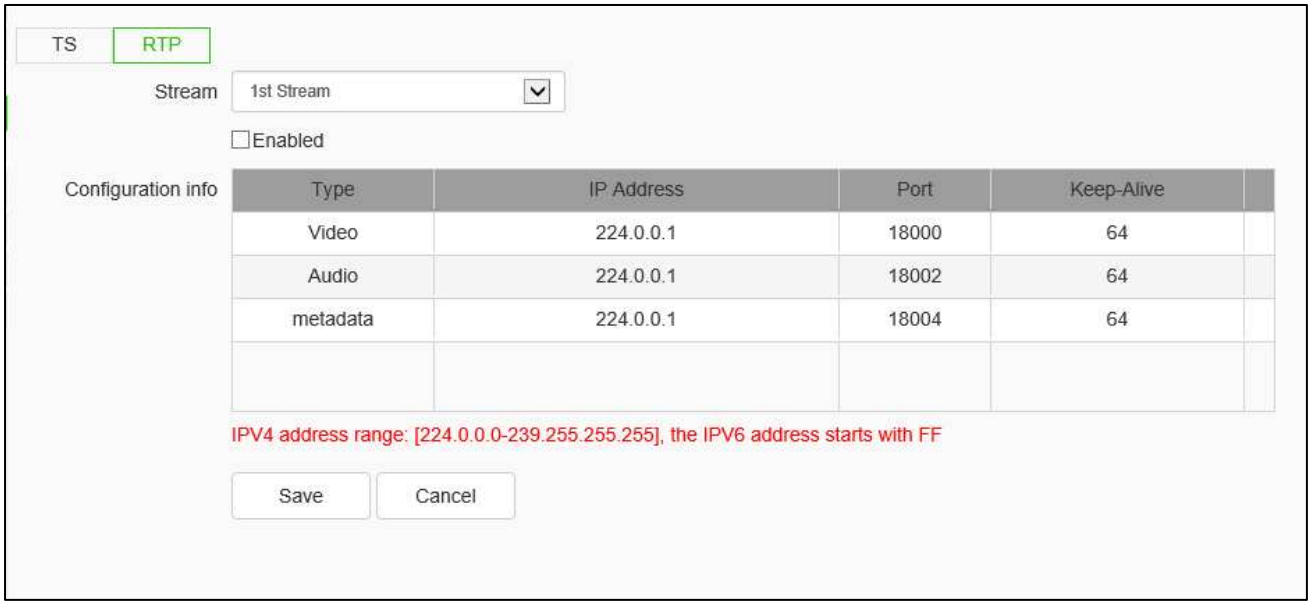

Multicast (RTP) setting interface

RTP means Real-time Transport Protocol that supplies real-time transport service for data.

[Channel No.]: equipment channel No. (Only for some models).

[Stream]: parameters of main code stream, second code stream and third code stream can be modified.

[IP address]: the IP address of multicast, supporting IPV4 and IPV6.

[Port]: the port of multicast.

[Keep-Alive]: the TTL value of socket, the maximum quantity of network segments permitted before specified IP packet is discarded by router (permissible range: 0-255)

Click [Enable] to enable audio, video and metadata transmition in current channel and code stream type.

Click [Save] to save current parameter settings.

Advanced Set - >802.1X

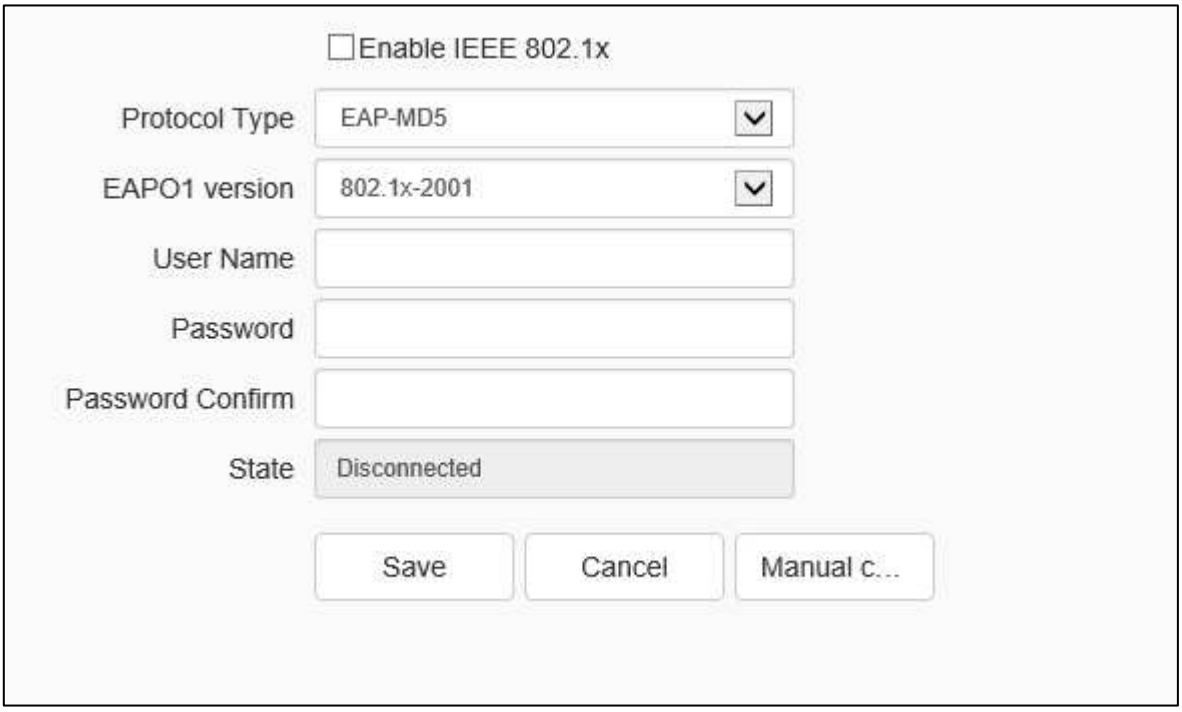

802.1X setting interface

Users are permitted to choose [EAPO version] “802.1x-2001” or “802.1x-2004”and set [user name], [password] and [password confirmation]. [Current status] shows the current connection status. Parameters can be saved by clicking [Save]. [Reset] shows current parameters; after saving the parameters, equipment will connect automatically. An authenticated connection can be started immediately by clicking [Manual connection].

Advanced Set - > QoS settings

QoS setting interface

[Audio/Video DSCP] input the DSCP parameters in the input box, disconnect and reconnect the video stream parameters to take effect, and [Event DSCP] input the DSCP parameters in the input box, and click [Save] to save the parameters. (supported by some models)

Advanced Set - > Access Platform

Platform access setting interface

[Platform Enabled]

Support the enabling and shutting down of onvif, RTSP, P2P and CGI. After setting, some devices will restart automatically and take effect.

Note: to replace the access platform, you need to first disable the enabled platform, and then select a new platform and enable it.

[Auto Filling Set]: click this button, the channel number and alarm input number will be increased and set from the current channel number.

[Save]: save the current settings.

[Cancel]: restores the last saved parameter.

[PU Set]

[PU set]: user can set the IP address and port number of [Register Server]. [Channel No.] Support [Auto Filling Setting] function.

[Auto fill setting]: Click this button, the channel number and alarm input number will be incremented and set from the current channel number.

[Storage]: Save the current settings. [Reset]: It can restore the parameters saved last time.

[GAT1400 Parameter Setting]

User can set such parameters as [Server URL], [Server Port], [Device ID], [Heartbeat Cycle],[Heartbeat Timeouts],[Registration status],[Channel NO.],[Channel ID]and.etc.

[Auto Filling Set]: click this button, the channel number will be increased and set from the current channel number.

[RTMP Parameter Setting]

Set [stream type] to select "main stream", "sub stream", "three stream" to push, enter [push stream address], [save], and complete the setting, [current status] display connection Whether it is normal, [Reset] displays the current parameters

Advanced Set - > Register Center

Register Center interface

Set [Server Name] [Server] [Port] [User Name] [Password] in [Registration Center] in the

registration center.

[Storage]: Save the current settings.

[Reset]: It can restore the parameters saved last time.

Advanced Set - >HTTPS

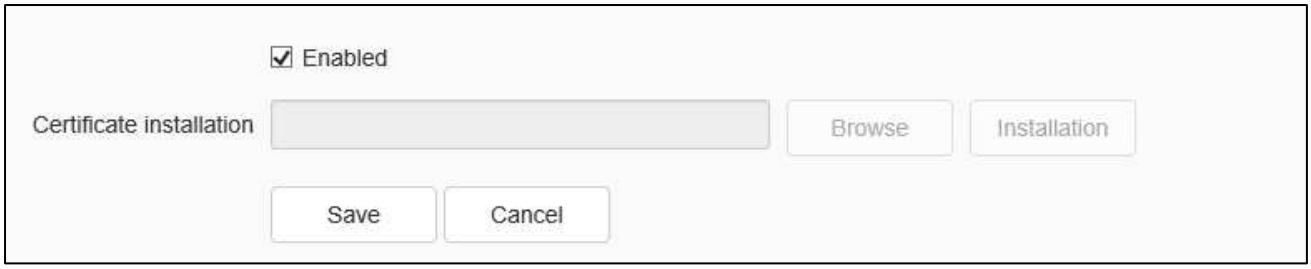

HTTPS interface

Import and install HTTPS certificates as needed.

[Certificate installation]: click the drop-down box and choose the type of server certificate to be installed. (Certificate can be managed by clicking “Safety management” -> “Certificate management”)

[Save]: Save the current settings.

[Cancel]: Restores the last saved parameter.

Advanced Set - >SRTP

SRTP interface

SRTP means Safe Real-time Transport Protocol that supplies cryptographic, authenticated and complete protection for data.

[Server certificate]: SRTP server certificate is configured.

[Encryption algorithm]: SRTP encryption algorithm is configured.

[Port No.]: SRTP service port is configured.

5.9.3. Safety management

Safety management - > Certificate management

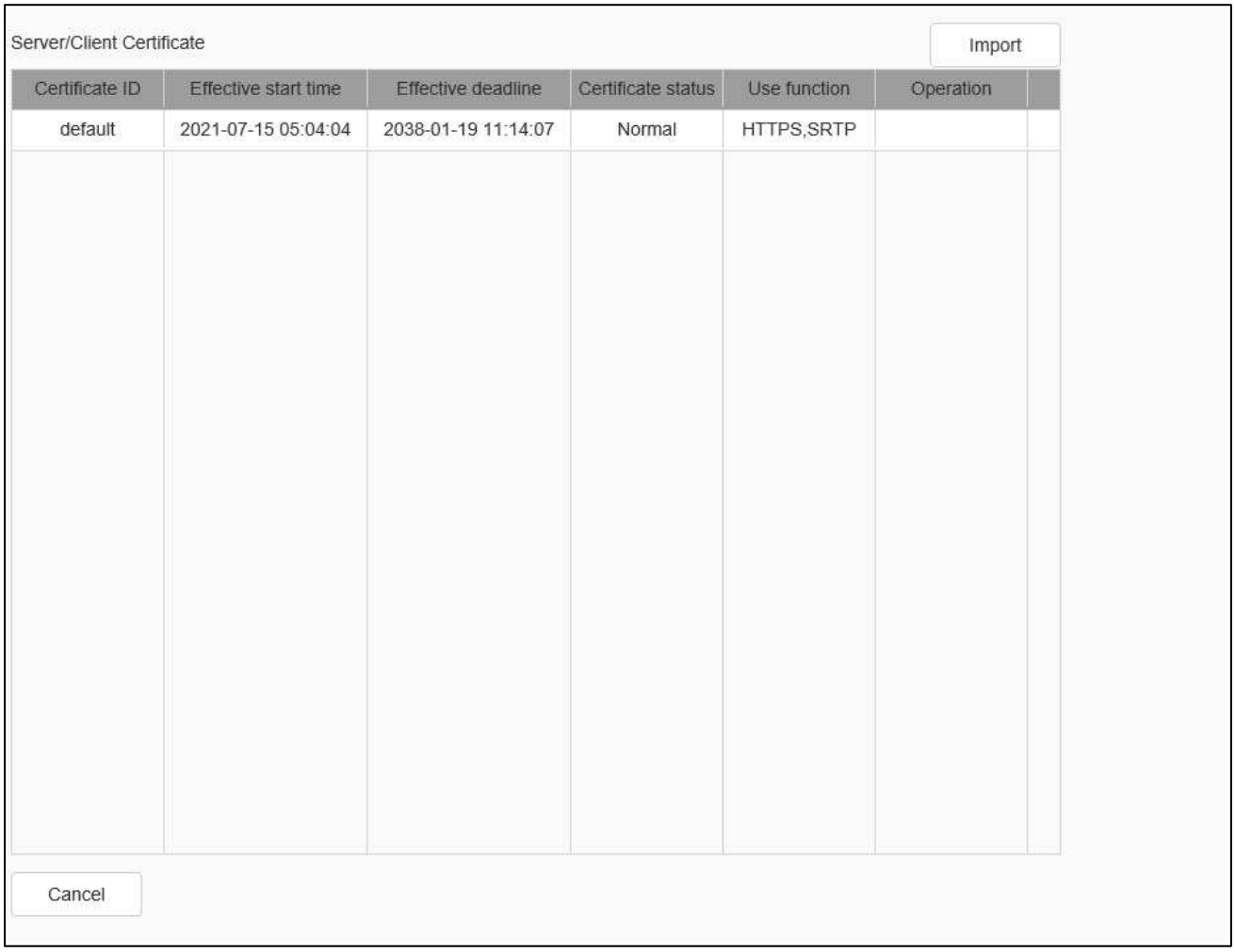

Certificate management interface

“Certificate management “manages all the certificates at server side and client side.

[Import]: click it to show a dialog box “Certificate import”, choose the certificate to be imported, then click “Import” to complete that.

[Server side / client side certificate] shows the current certificate ID, valid start time, valid

deadline, certificate status, functions and operation.

Note: Only some models support above functions, please be subject to the actual equipment.

Safety management - > authentication type

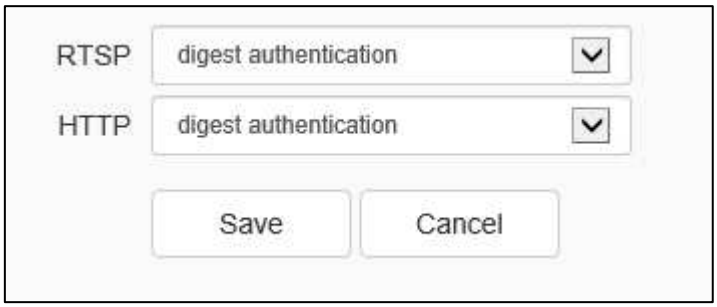

Authentication type interface

Set authentication type on RTSP and HTTP as needed.

[RTSP authentication type]: Digest and digest&basic authentication types are supported.

[HTTP authentication type]: Digest and digest&basic authentication types are supported.

[Save]: save the current settings.

[Cancel]: restores the last saved parameter.

5.10Human body temperature measurement setting

Some devices support body temperature measurement. According to the actual situation or preferences on the site, users can set basic parameter information and abnormal alarm information of body temperature measurement.

5.10.1. Human body temperature measurement setting

The user sets the relevant parameters of human body temperature measurement according to the needs.

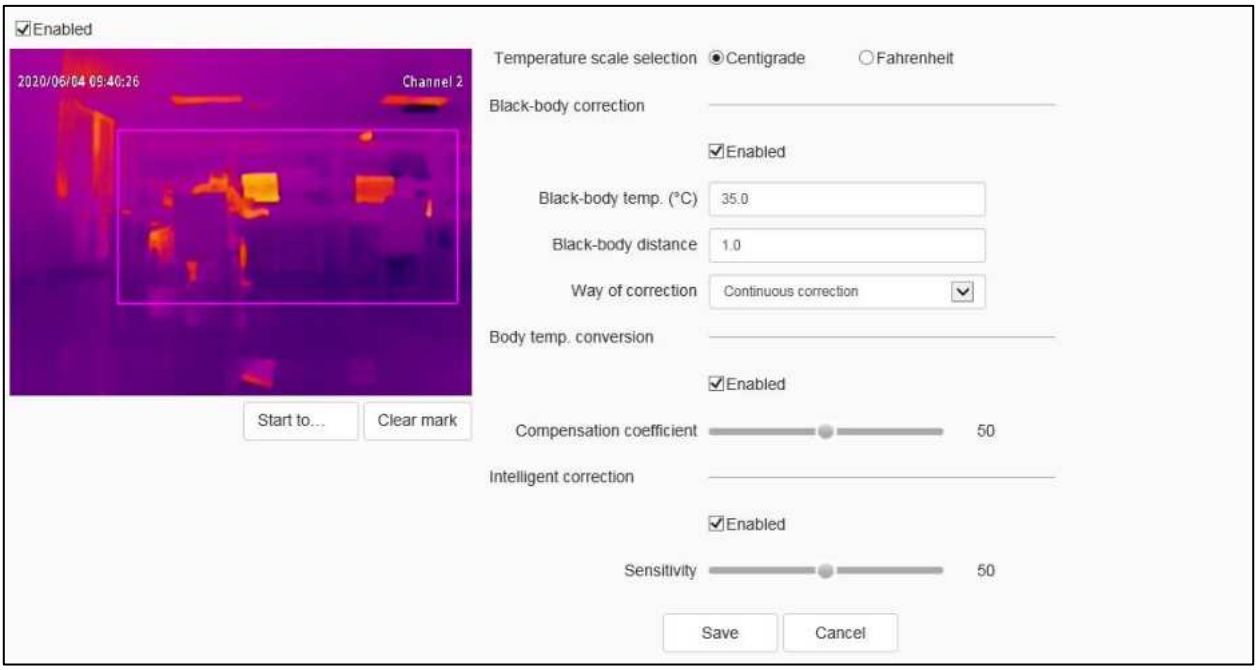

Human body temperature measurement setting interface

(1) Check the [Enable] check box to turn on the human body temperature measurement function, and uncheck to turn off the human body temperature measurement function.

(2) Draw the detection area, and the device will detect the body temperature in the drawing area.

(3) Set parameter information of [Temperature scale selection], [Black-body correction], [Body temp. conversion] and [Intelligent correction] as required.

(4) After setting, click [Save] to save the parameter settings. To reset the parameter information, click [Cancel] to restore the last saved parameter。

Description:

[Temperature scale selection]: The device supports two temperature scales: Centigrade scale and Fahrenheit. The system defaults to Centigrade scale.

[Black-body correction]: The device supports temperature correction by comparing temperature with a set thermostatic source (black body). Users can realize this function by setting the parameter information of [Black-body temp.], [Black-body distance], [Way of correction].

[Black-body temp.]: Set the black-body temperature for temperature correction.

[Black-body distance]: The device supports temperature correction within a certain range, recommending 1-3m.

Note: Black-body is a constant temperature source. Distance will cause thermal radiation loss. The

larger the distance loss, the worse the correction effect.

[Way of correction]: The equipment supports manual correction and continuous correction for temperature correction:

[Manual correction]: The user clicks on the Manual Correction button to perform a temperature correction.

[Continuous correction]: The device will continuously correct the temperature.

[Body temp. conversion]: The device supports the conversion of internal body temperature to body temperature. Users can realize this function by setting the parameter information of[Compensation coefficient].

[Compensation coefficient]: The compensation coefficient ranges from 0 to 100, which can be set according to the actual environment.

[Intelligent correction]: The device supports big data temperature correction.Users can realize this function by setting the parameter information of[Sensitivity].

[Sensitivity]: The Sensitivity range is 0-100, which can be set according to the actual environment.

After all the above parameters are set, click [Save] to save and take effect; click [Cancel] to restore the last saved parameters.

5.10.2. Alarm on unacceptable body temp.

[Alarm on unacceptable body temp.] => [Basic Setting]

Basic setting interface

The user sets the upper limit of body temperature. When the upper limit of body temperature is exceeded, the alarm will be started.

After enabling [Invalid temperature], invalid temperature will be recorded if the actual temperature measured does not accord with the temperature of human body.

Click [Save] to save the parameter settings.

Click [Cancel] to restore the last saved parameter.

[Alarm on unacceptable body temp.] => [Schedule]

Schedule interface

Set the effective time of abnormal temperature alarm, which is set 24 hours a day by default. Click the blue bar to modify the deployment time, and then click save.

Click [Save] to save the parameter settings.

Click [Cancel] to restore the last saved parameter.

[Alarm on unacceptable body temp.] => [Linkage Mode]

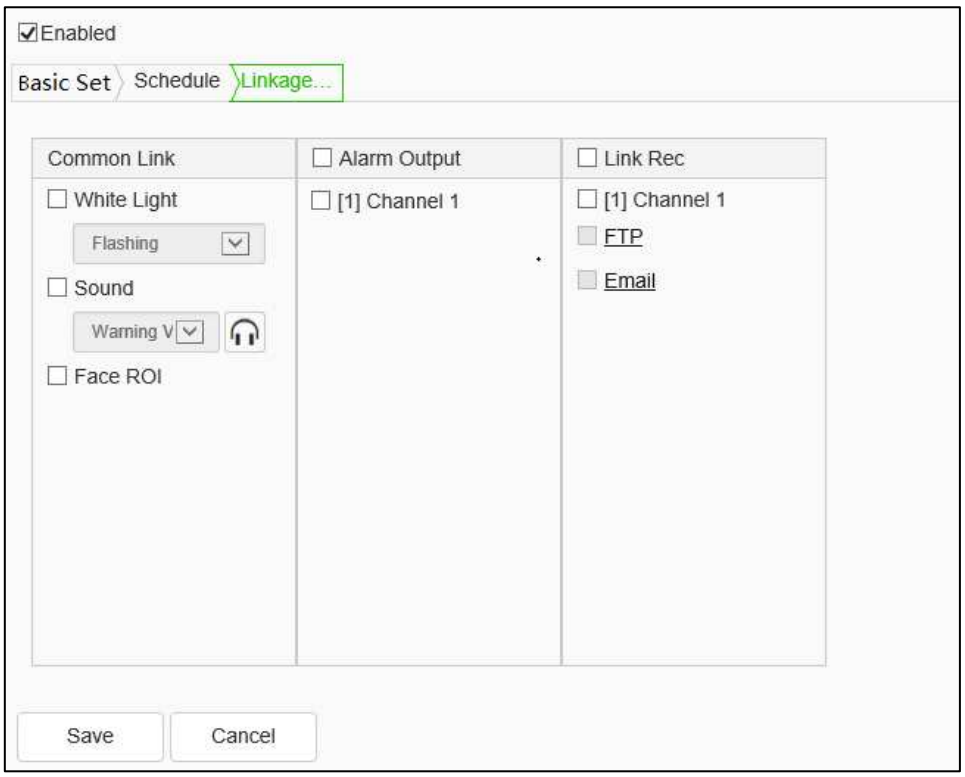

Linkage mode interface

Set the alarm linkage function when the alarm occurs. For example: linkage output, linkage video recording, conventional linkage, etc.

Click [Save] to save the parameter settings.

Click [Cancel] to restore the last saved parameter.

5.10.3. Black body abnormal alarm

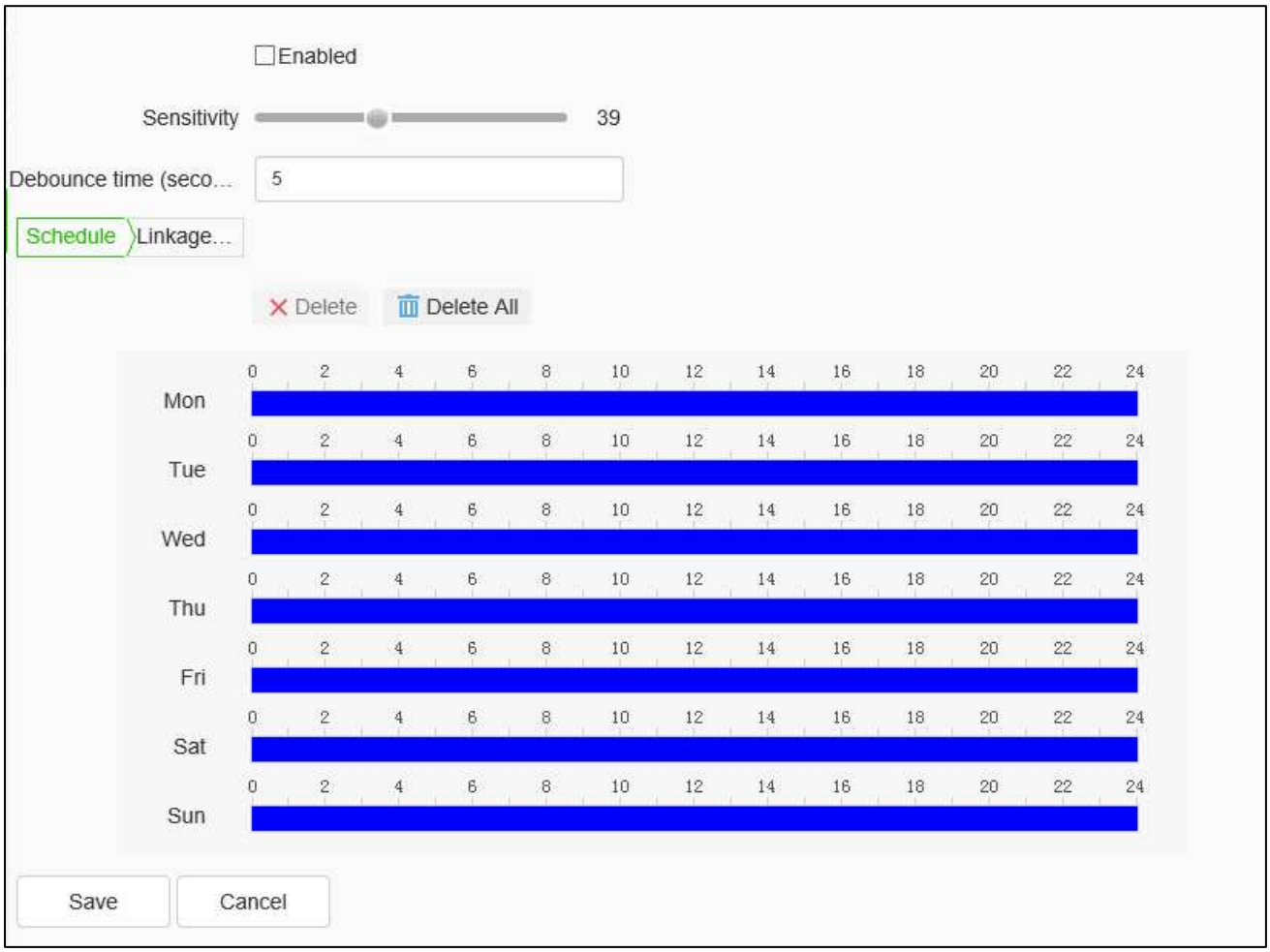

Black body abnormal alarm setting interface

Click “Enable” to enable alarm for abnormal black body. In case of problem about black body, an alarm will be given.

Set the sensitivity of monitoring black body. The higher sensitivity is, the more sensitive it will be.

Set flutter-free time (second) in range 0-100; alarm is given according to set time.

Set the effective time of black body abnormal alarm, which is set 24 hours a day by default. Click the blue bar to modify the deployment time, and then click save.

Click [Save] to save the parameter settings.

Click [Cancel] to restore the last saved parameter.

Note: the alarm for abnormal black body takes effect when continuous black body calibration is started.

5.10.4. Normal body temperature linkage

Normal body temperature linkage - > Basic Set

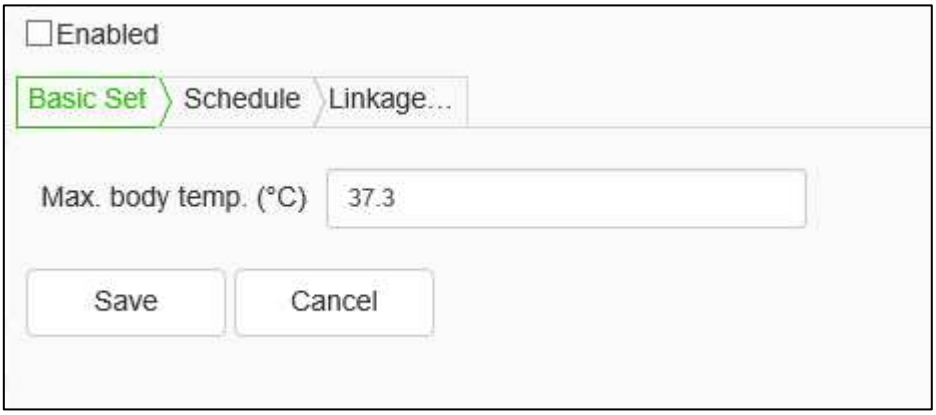

Normal body temperature linkage setting interface

User can set [Upper limit of body temperatre]. If actual body temperature is higher than the upper limit, an alarm will be given.

Click [Save] to save the parameter settings.

Click [Cancel] to restore the last saved parameter.

Normal body temperature linkage - >Schedule

Schedule interface

Set the effective time of normal body temperature linkage, which is set 24 hours a day by default.

Click the blue bar to modify the deployment time, and then click save.

Click [Save] to save the parameter settings.

Click [Cancel] to restore the last saved parameter.

Normal body temperature linkage - >Linkage Mode

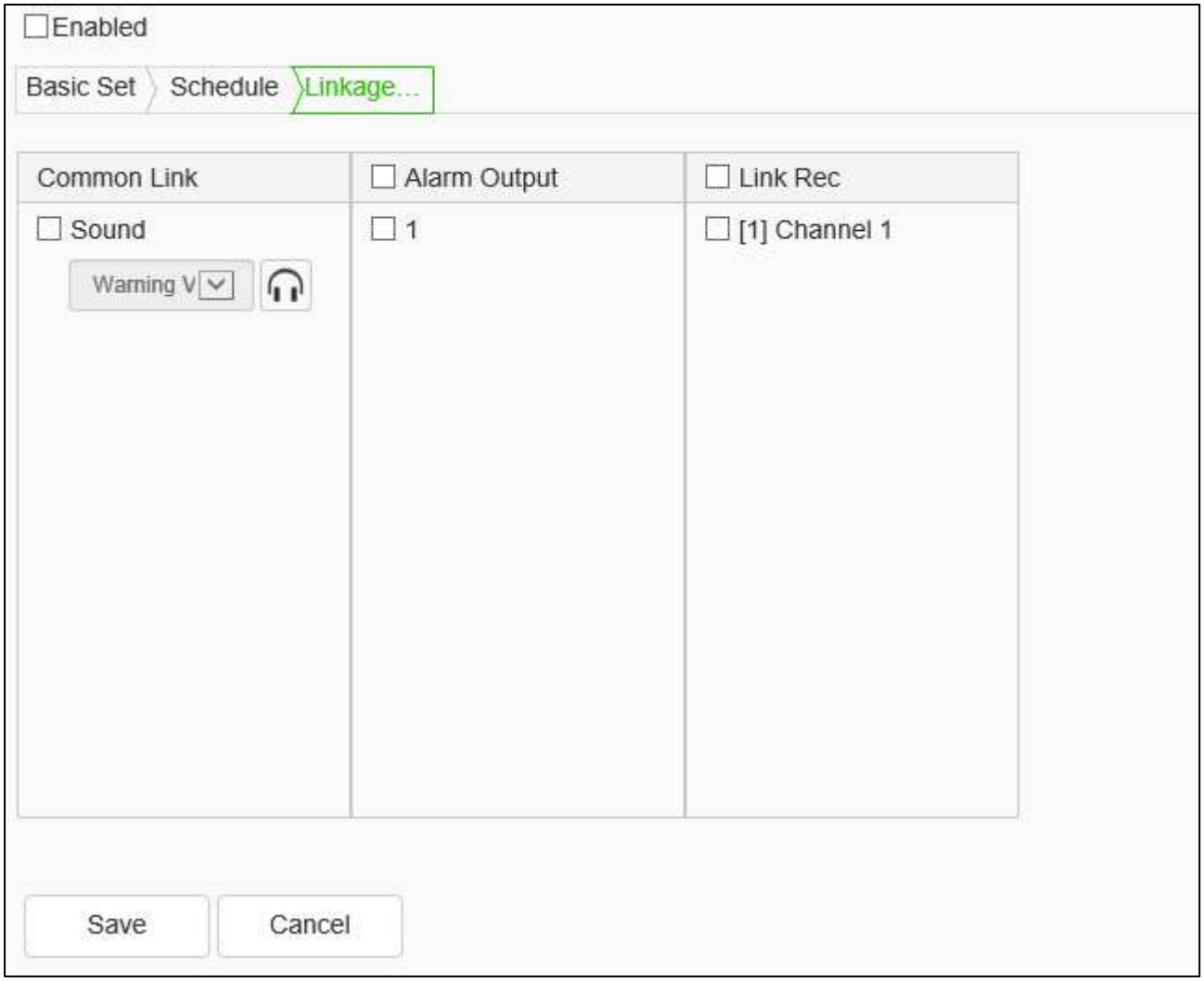

Linkage mode interface

Set the alarm linkage function when the alarm occurs. For example: linkage output, linkage video recording, conventional linkage, etc.

Click [Save] to save the parameter settings.

Click [Cancel] to restore the last saved parameter.

5.11Event Schedule

5.11.1. Event Management

Event management - > Event Input

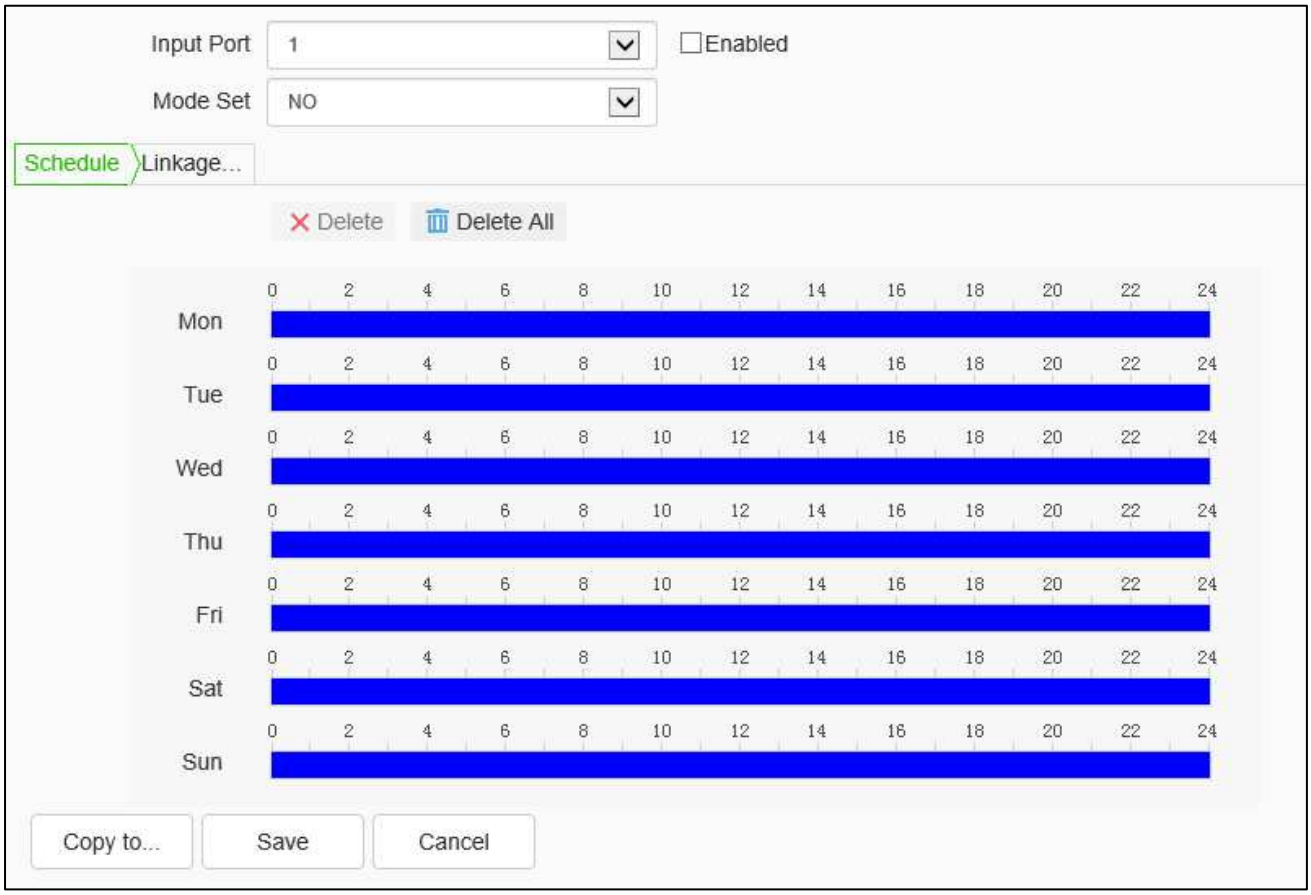

Event input setting interface

Set port event detection related parameters.

(1) Select the input port, check the [Enable] check box to enable the port alarm detection function, and uncheck to turn off the port alarm detection function.

(2) [Mode Set] set normally open and normally closed, where [NO] refers to the alarm when the disconnected line is short circuited, and [NC] refers to the alarm when the connected line is disconnected.

(3) The user can set the [Schedule] as required, and only detect the alarm within the set date and time period.

(4) Set [Linkage Mode]to realize the alarm linkage after triggering the alarm, such as[Common link],

[Alarm Output], [Link Snap],[l PTZ linkage channel], etc.As shown in the figure below

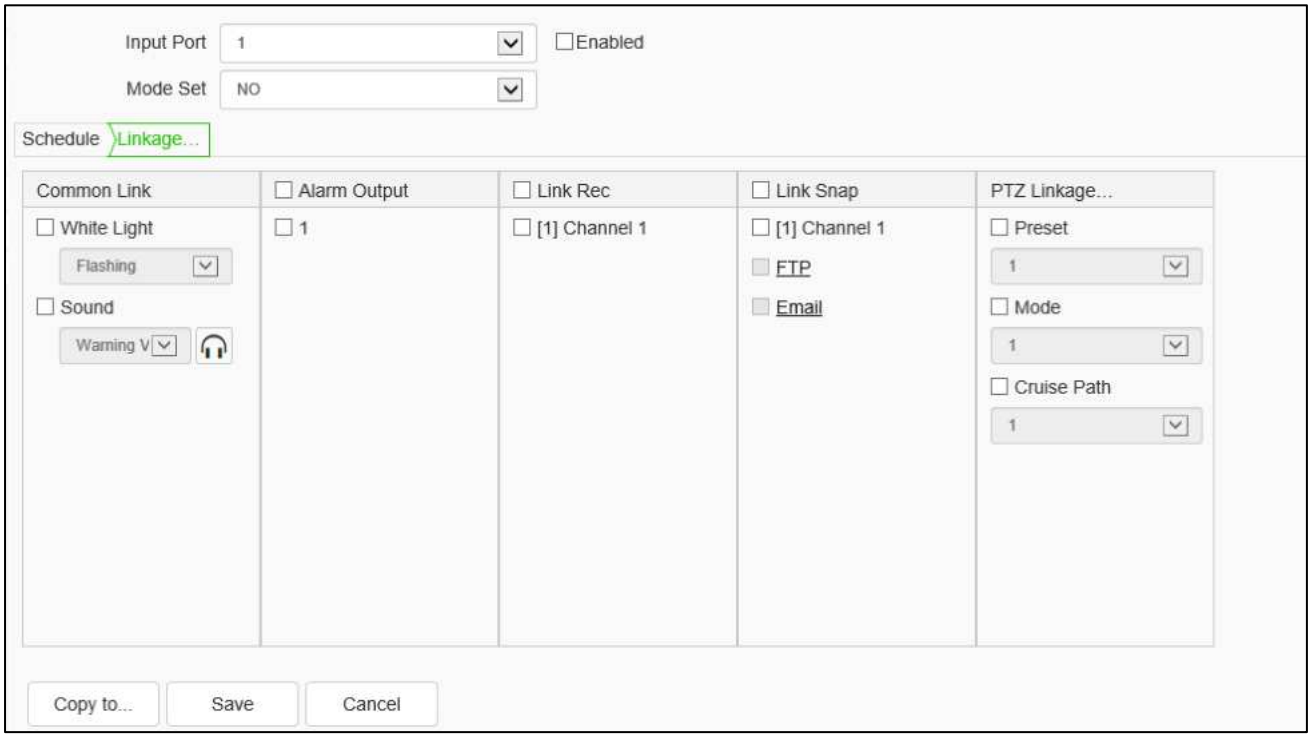

Linkage Mode Setting Interface

(5) Click [Save] to save the corresponding parameter settings, and click [Copy to…] copy the parameters of the current port number to other port numbers. Click [Cancel]o restore the last saved parameter.

Note: alarm input and alarm linkage output are limited to products that support alarm input and alarm output functions.

Event Management - > Event Output

Event output setting interface

The user can select two modes to set: [NO] and [NC]. Select the output port, set the port alias, select the mode setting, and select the alarm elimination mode. You can set the delay time of the alarm state through [Delay Time(s)].

Click [Save] to save the corresponding parameter settings, and click [Copy To…] copy the parameters of the current port number to other port numbers. Click [Cancel] to restore the last saved parameter.

Event Management - > Motion

Motion setting interface

The user sets the mobile alarm area. When there is an object moving in the setting area, the video preview interface will prompt the video mobile alarm, and the corresponding alarm linkage will be carried out according to the setting.

(1) The mobile alarm detection function is enabled by default. Drag the left mouse button in the video screen to draw the area to detect the mobile alarm. Click [Delete Region] to delete the mobile alarm detection area.

(2) Set the mobile alarm sensitivity, the higher the value, the more sensitive the mobile alarm detection.

(3) The user can set the [Schedule] as required, and only detect the alarm within the set date and time

period.

(4) Set [Linkage Mode] to realize the alarm linkage after triggering the alarm, such as [Alarm Output], [Linkage Snap], etc.

(5) Click [Save] to save the corresponding parameter settings, and click [Copy To…] copy the parameters of the current port number to other port numbers. Click [Cancel] to restore the last saved parameter.

Event Management - > Mask

Mask setting interface

After the occlusion alarm is turned on, when the image in the video screen is blocked, the alarm situation will be detected according to the sensitivity.

(1) Check the [Enable] check box to turn on the video blocking alarm detection function, and uncheck to turn off the video blocking alarm detection function.

(2) Set the video occlusion alarm sensitivity, the higher the value, the more sensitive the video occlusion alarm detection.

(3) The user can set the [Schedule] as required, and only detect the alarm within the set date and time

period.

(4) Set the [Linkage Mode] to realize the alarm linkage after triggering the alarm, such as [Alarm Output], [Link Snapshot], etc.

(5) Click [Save] to save the corresponding parameter settings, and click [Copy To…] copy the parameters of the current port number to other port numbers. Click [Cancel] to restore the last saved parameter.

Event Management - > Voltage Event

After enabling voltage alarm (only for some models), an alarm will be given if voltage of equipment is abnormal.

Event Management - > temperatures and humidity alarm

When user select [Temperature and humidity alarm] in [Peripheral type], this interface can be set. (User can set peripherals in [Configuration] - [System] - [Serial Port] - [Serial Port Set] - [Work Mode], choose [peripherals], and select [Temperature and humidity alarm] in [peripheral type]). User needs to check [enable] to open [Temperature and humidity alarm] function, and then, setting interval, temperature threshold, humidity threshold, schedule, link type, etc.

Event Management - > Other Alarms

Some models support abnormal alarm. For exception types, you can select [Disk Full], [Disk R/W Error], [IP Address Conflict], [MAC Address Conflict], and set [Common Link] and [Alarm output].

In [Common Link], you can set [Send to Server] and [Send Email]. ([IP Address Conflict] and [MAC Address Conflict] cannot be set.)

[Alarm Output] the alarm output port number can be selected.

Alarm management - > Mail alarm

Some models support email alarm. After the user enables email alarm, the email server will automatically send the alarm email to the email address set by the user when an alarm occurs.

5.11.2. Event Server

It is used by Users to set the alarm server on sole discretion, type in [Server IP] and [Port], and

then click the [Save] button.

5.12VCA/Smart surveillance

Some models support a variety of application modes, such as [face capture], [intelligent monitoring] and so on. When an application mode is selected from [Allocation of resources] menu, the corresponding intelligent analysis' parameters will be set.

[Capture facial images]: When the algorithm finds a person's face in the video, it captures the image and saves it to the present location.

[Smart surveillance]: Common monitoring mode includes intelligent algorithms such as behavior analysis, crowd gathering, video diagnosis and audio anomaly detection, etc.

5.12.1. Algorithm Configuration

Algorithm configuration setting interface

[Enable]: enables or disables the intelligent analysis function of the current channel.

[Scene algorithm]: the device supports a variety of algorithms, such as behavior analysis, crowd aggregation, face detection, number of people statistics, and on duty detection, which are mutually exclusive. Only one of them can be enabled. Some devices support face detection, population statistics, on duty detection algorithm, video diagnosis, audio anomaly detection, etc.

Description:

(1) Different models support different algorithms. Please refer to the actual interface.

(2) Some algorithms are mutually exclusive with others. Other algorithms can be enabled simultaneously. Please refer to the actual interface.

(3) Select the corresponding algorithm in [Scene algorithm] and set the parameters of the algorithm.

Click “Save” to save the current scene algorithm.
Click “Next” to save the current scene algorithm and go to the next step (event parameter).
Click “Reset” to recover to the last configuration.

5.12.2. Create Rule

Interface of Create Rule setting

[Enable]: enables or disables the intelligent analysis function of the current channel.

[Event set]: the device supports a variety of algorithms, such as behavior analysis, crowd aggregation, face detection, number of people statistics, and on duty detection, which are mutually exclusive. Only one of them can be enabled. Some devices support face detection, population statistics, on duty detection algorithm, video diagnosis, audio anomaly detection, etc.

Description:

(1) Different models support different algorithms. Please refer to the actual interface.

(2) Some algorithms are mutually exclusive with others. Other algorithms can be enabled simultaneously. Please refer to the actual interface.

(3) Select the corresponding algorithm in [event type] and set the parameters of the algorithm.

[Event Selection] = > [Behavior Analysis]

[Behavior Analysis]: the algorithm includes 10 specific algorithms, including trip line, double trip line, perimeter, item left behind, item lost, wandering, running, parking, alert, heat map. Each algorithm can be repeatedly enabled and configured with different parameters, but the total rule cannot exceed 10. After setting, click save, and then click next to configure [Event Schedule]. See [Event Schedule] for details.

[Event Type] = > [Behavior Analysis] = > [Tripwire]

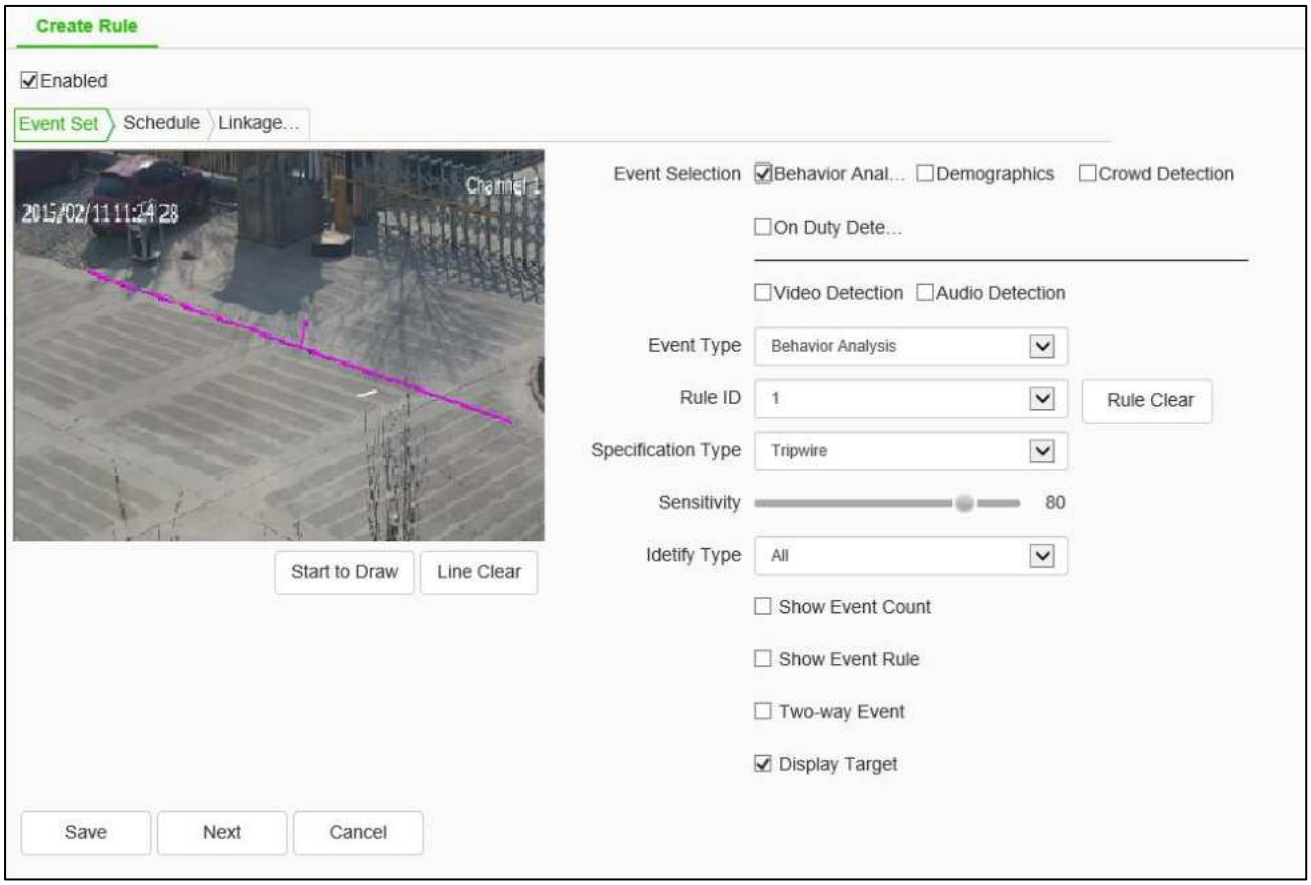

Tripwire setting interface

(1) Select the rule number, set the event as trip wire, and check [Enable] to enable the rule.

(2) Draw a rule line, and indicate the direction in which it is forbidden to cross with the arrows on the rule line.

(3) Set whether to display alarm statistics, display alarm rules, two-way alarm and display target.

(4) Click save after setting.

[Event Type] = > [Behavior Analysis] = > [Double Tripwire]

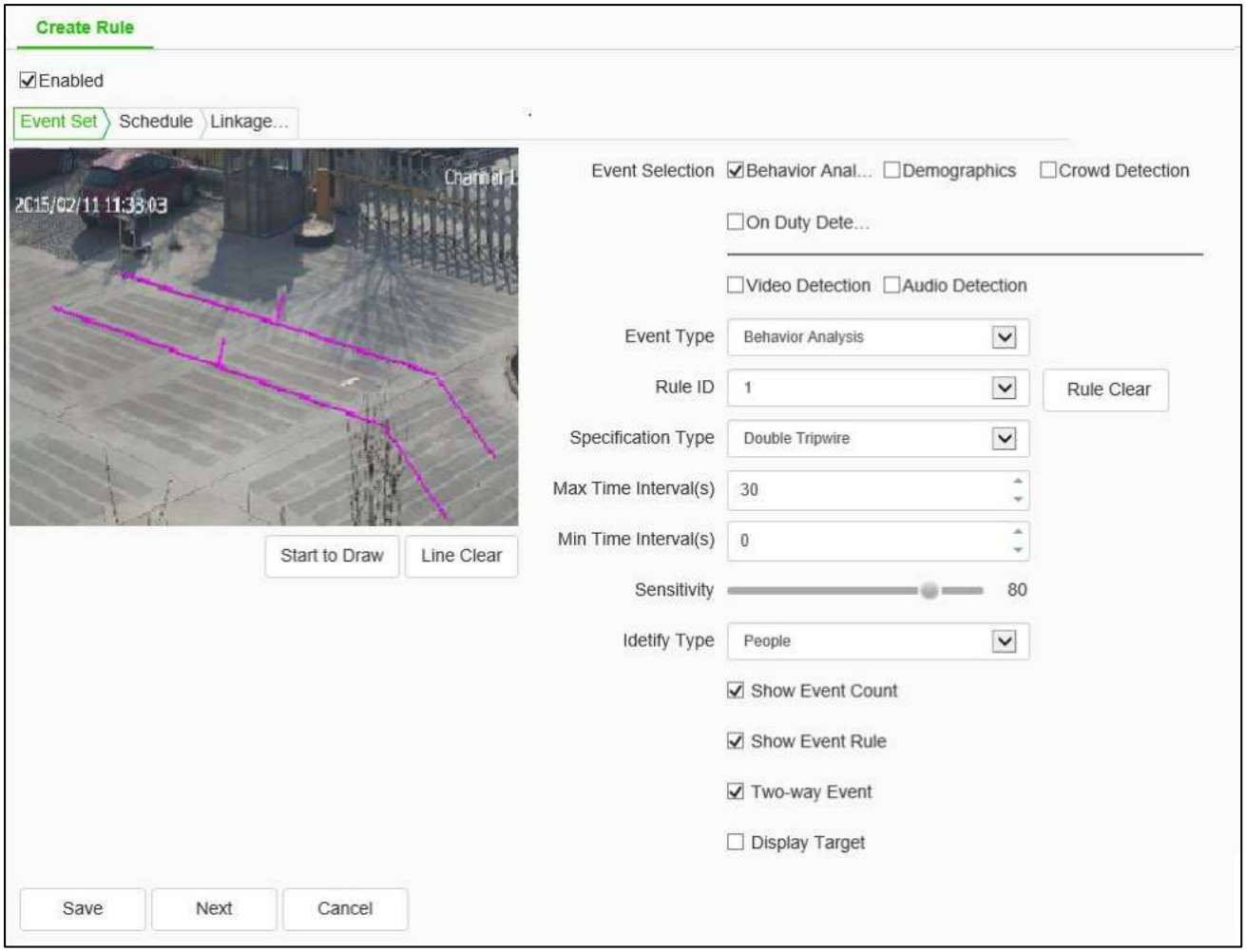

Double tripwire setting interface

(1) Select the rule number, set the event as double trip wire, and check [Enable] to enable the rule.

(2) Draw 2 rule lines, and indicate the direction in which it is forbidden to cross with the arrows on the rule line. The directions of the 2 rule lines should be the same. An alarm will be issued when crossing two lines continuously within the specified time.

(3) Set the maximum and minimum time intervals, which means the time range of crossing two rule lines consecutively.

(4) Set whether to display alarm statistics, display alarm rules, two-way alarm and display target.

(5) Click save after setting.

[Event Type] = > [Behavior Analysis] = > [Perimeter]

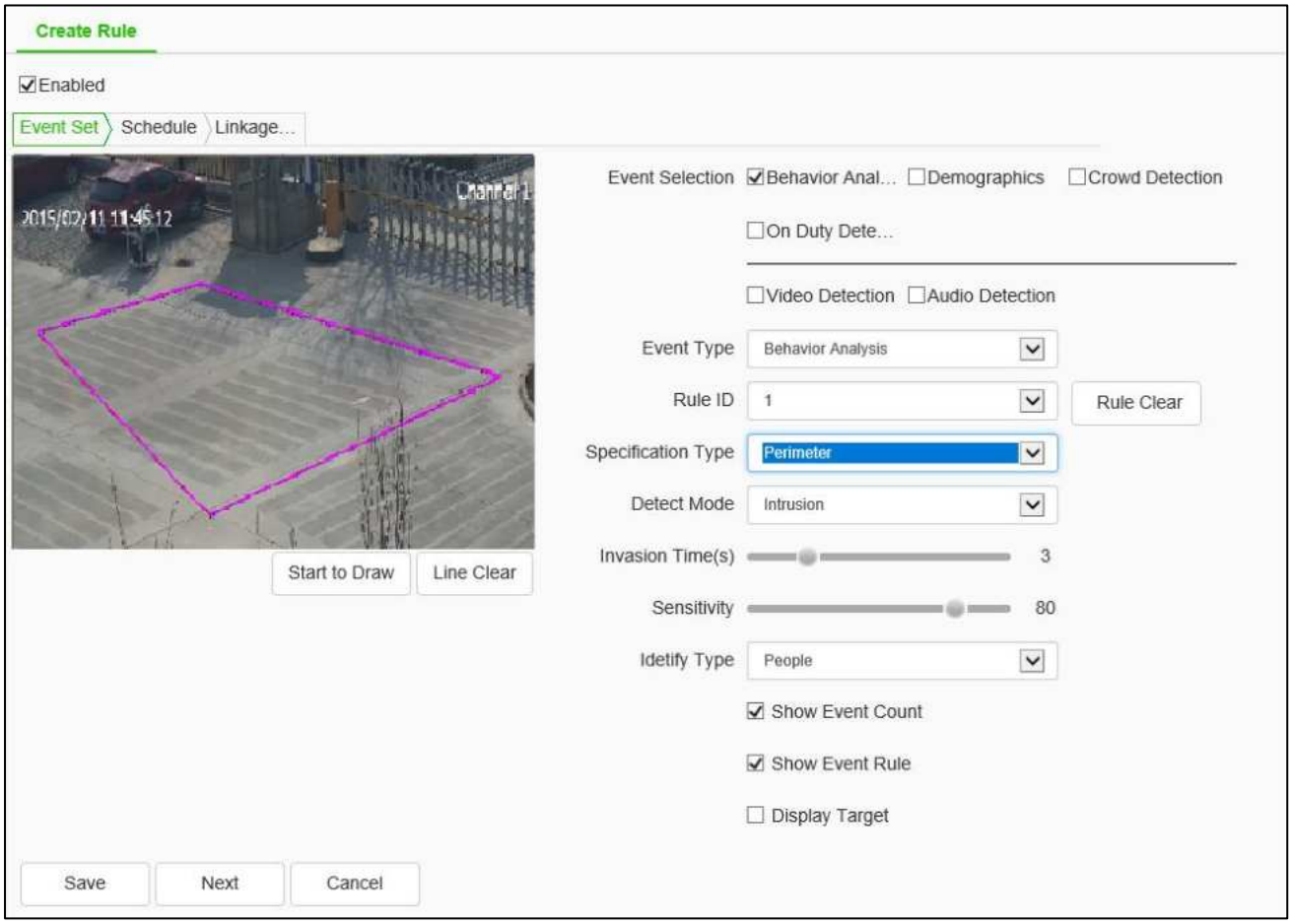

Perimeter setting interface

(1) Select the rule number, set the event as the perimeter, and check [Enable] to enable the rule.

(2) Draw the perimeter detection area.

(3) Select the detection mode. In entry mode, an alarm will be triggered in the area where the target entered; in leaving mode, an alarm will be triggered in the area where the target left; in intrusion mode, an alarm will be triggered when the target is kept in the detection area for the time specified for intrusion.

(4) Set the intrusion time, which means that an alarm will be triggered when the target is kept in the detection area for the time specified.

(5) Click save after setting.

[Event Type] = > [Behavior Analysis] = > [Object Abandone]

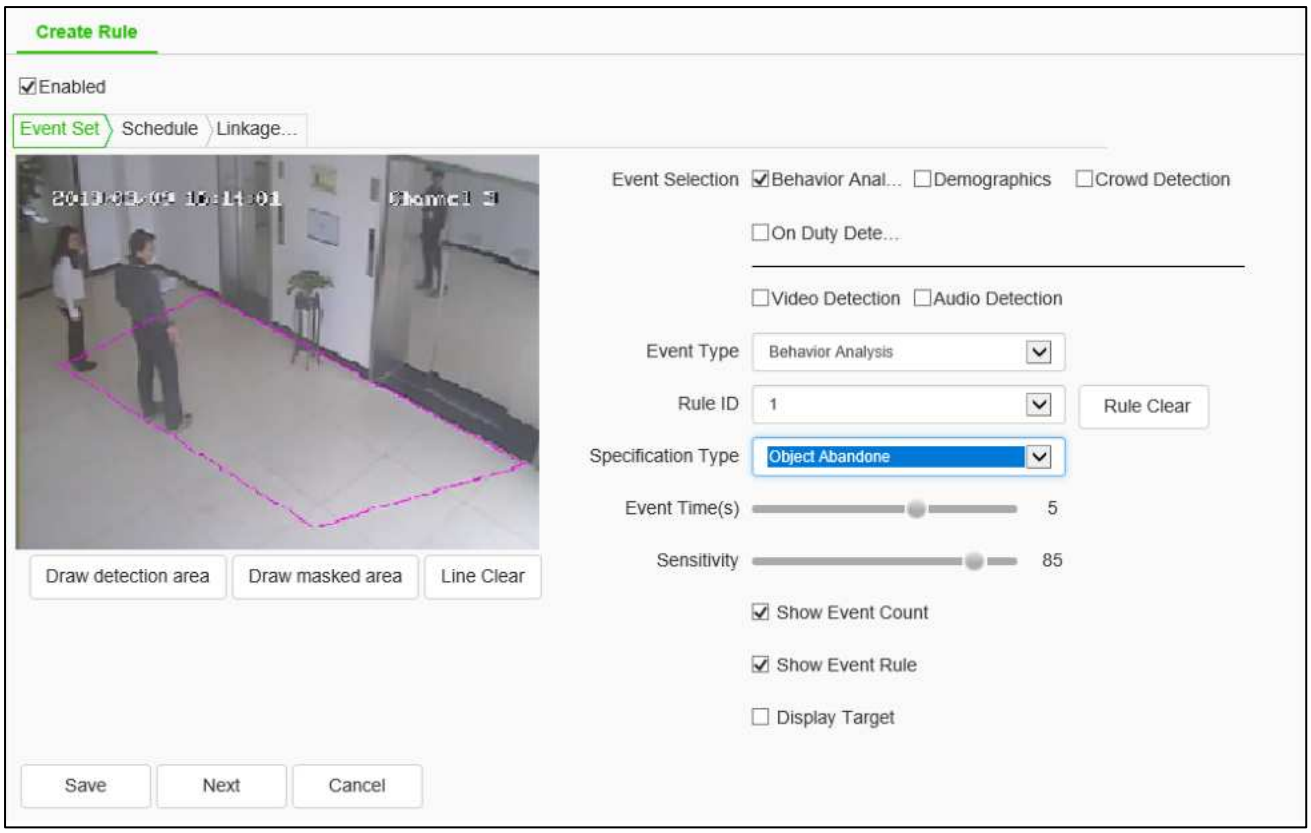

Object Abandone setting interface

(1) Select the rule number, set the event as item left, and check [Enable] to enable the rule.

(2) Draw the item left detection area and masked area. When the item left and item lost are enabled simultaneously, the detection areas should not overlap.

(3) Set the alarm time: indicate that an alarm will be triggered when the target is kept in the left state in the picture for the time specified.

(4) Click save after setting.

[Event Type] = > [Behavior Analysis] = > [Missing Objet Detection]

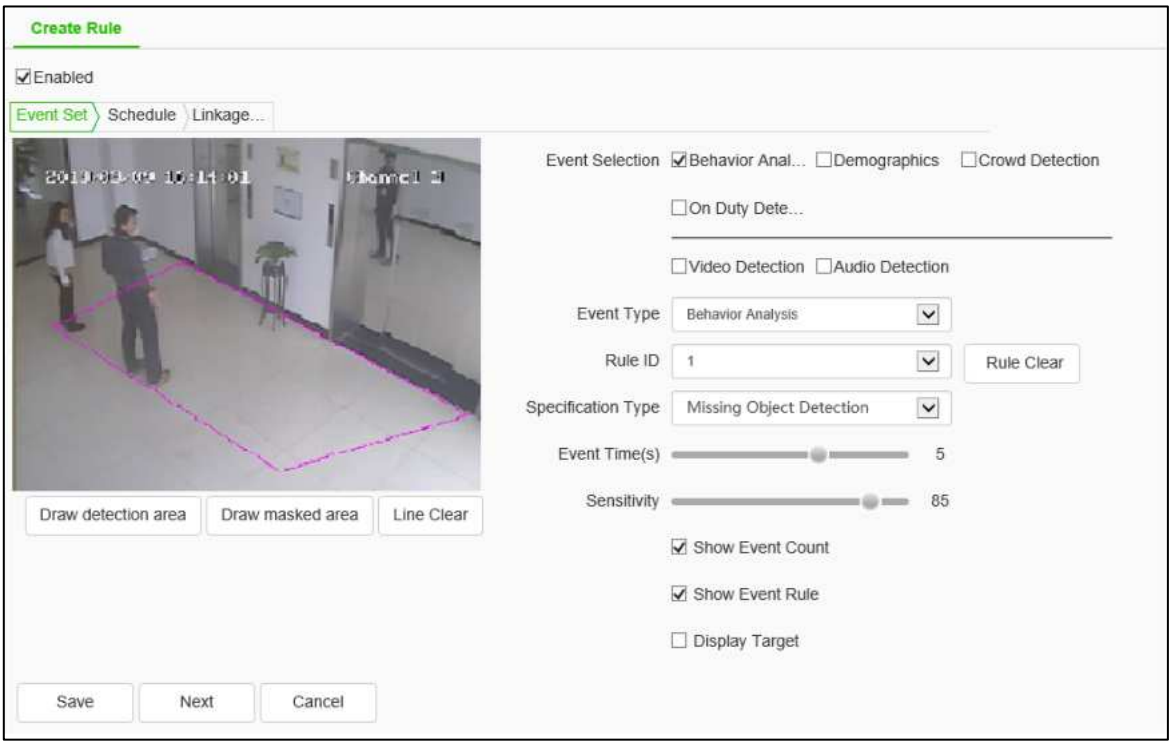

Missing Object Detection interface

(1) Select the rule number, set the event as item lost, and check [Enable] to enable the rule.

(2) Draw the item left detection area and masked area. When the item lost and item left are enabled simultaneously, the detection areas should not overlap.

(3) Set the alarm time: indicate that an alarm will be triggered when the target is kept in the lost state in the picture for the time specified.

(4) Click save after setting.

[Event Type] = > [Behavior Analysis] = > [Loiter]

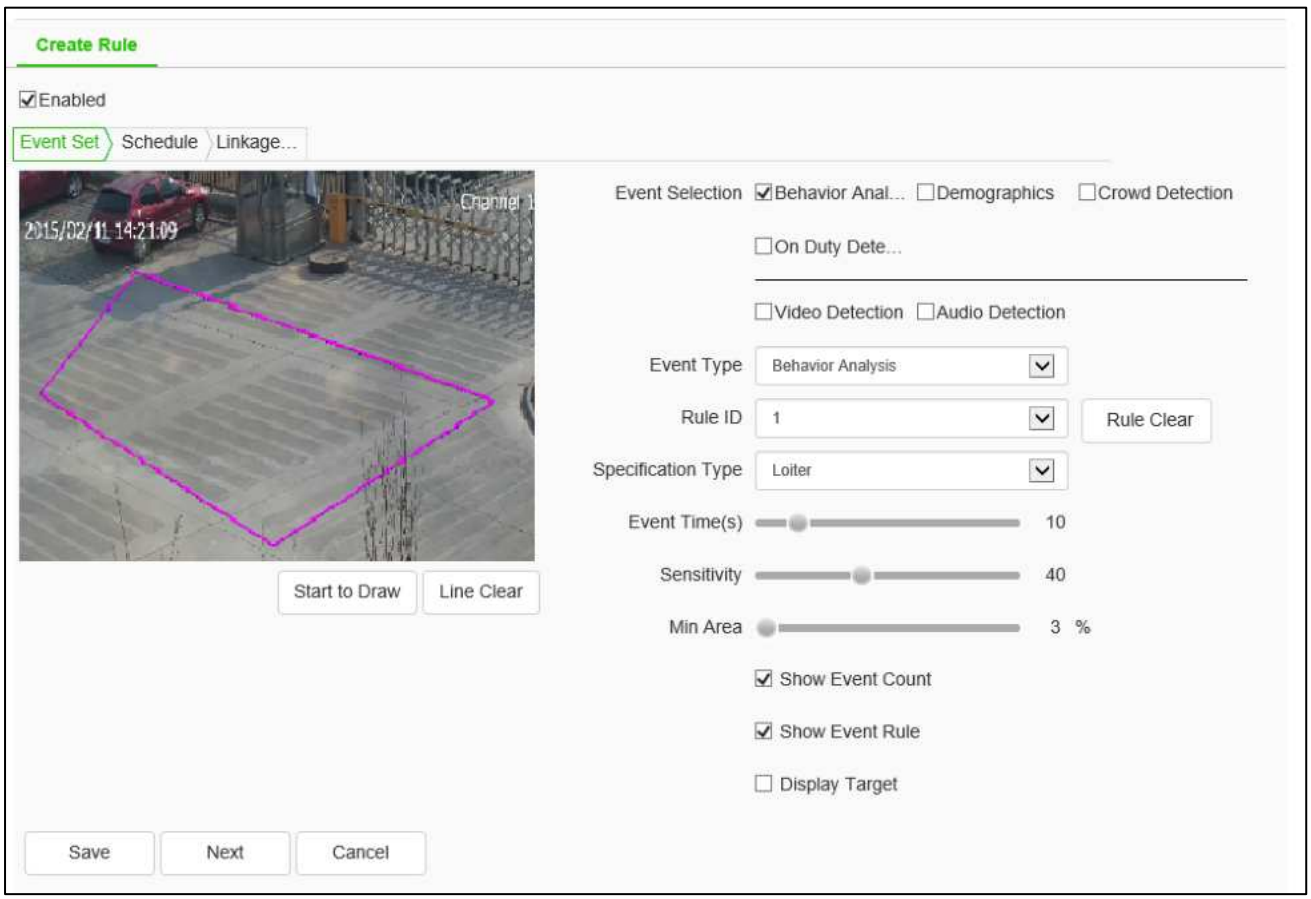

Loiter setting interface

(1) Select the rule number, set the event as wandering, and check [Enable] to enable the rule.

(2) Draw a wandering detection area.

(3) Set the alarm time: indicate that an alarm will be triggered when the target is kept in the wandering state in the picture for the time specified.

(4) Set the minimum area to indicate that the target's moving range (area percentage) in the detection area will trigger the alarm when the area is reached.

(5) Set the sensitivity. The larger the value is, the more sensitive it is.

(6) Click save after setting.

[Event Type] = > [Behavior Analysis] = > [Running]

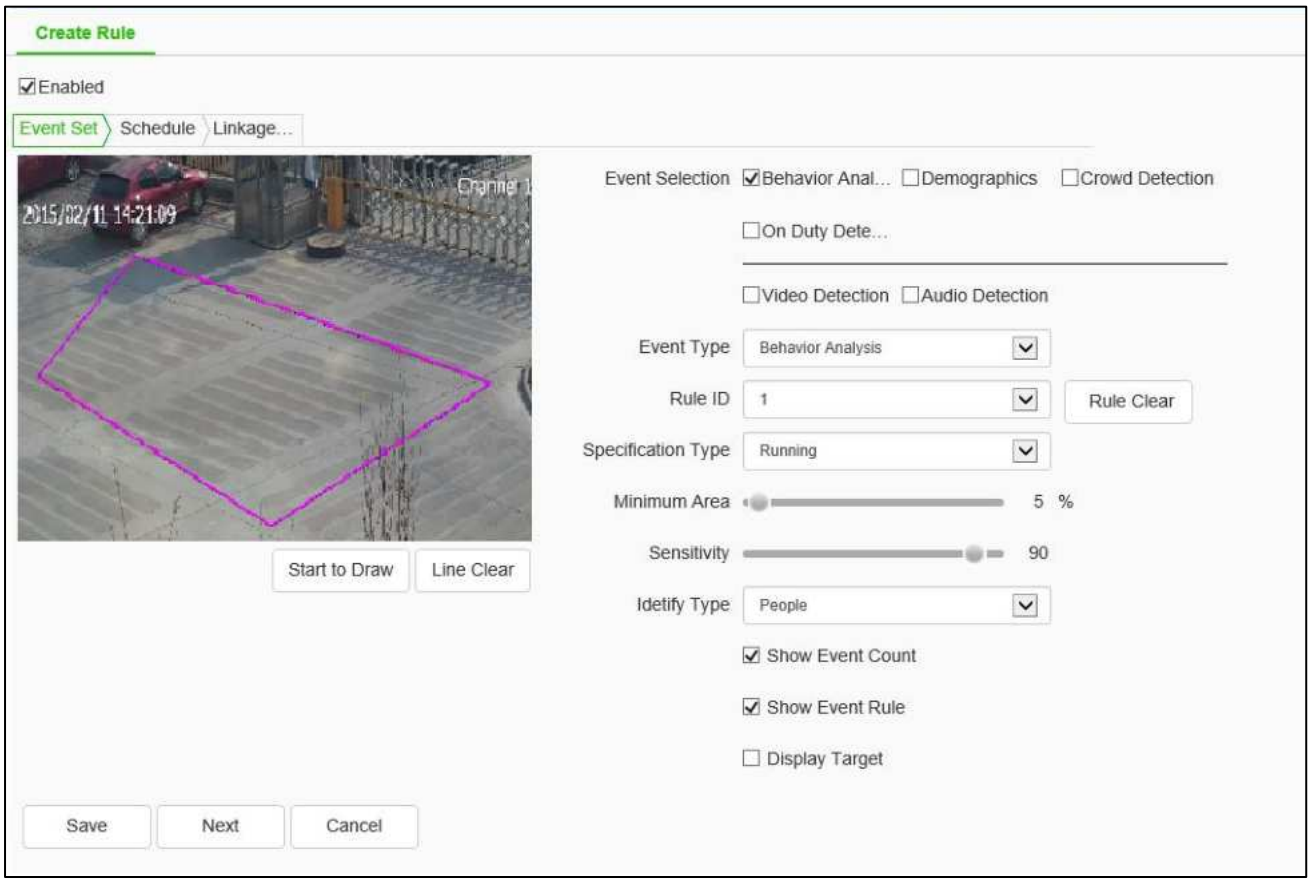

Running setting interface

(1) Select the rule number, set the event as running, and check [Enable] to enable the rule.

(2) Draw a running detection area.

(3) Set the minimum moving distance per second, which means that the target's moving speed (area percentage / second) in the screen is greater than the speed, and then it enters the running state.

(4) Click save after setting.

[Event Type] = > [Behavior Analysis] = > [Parking]

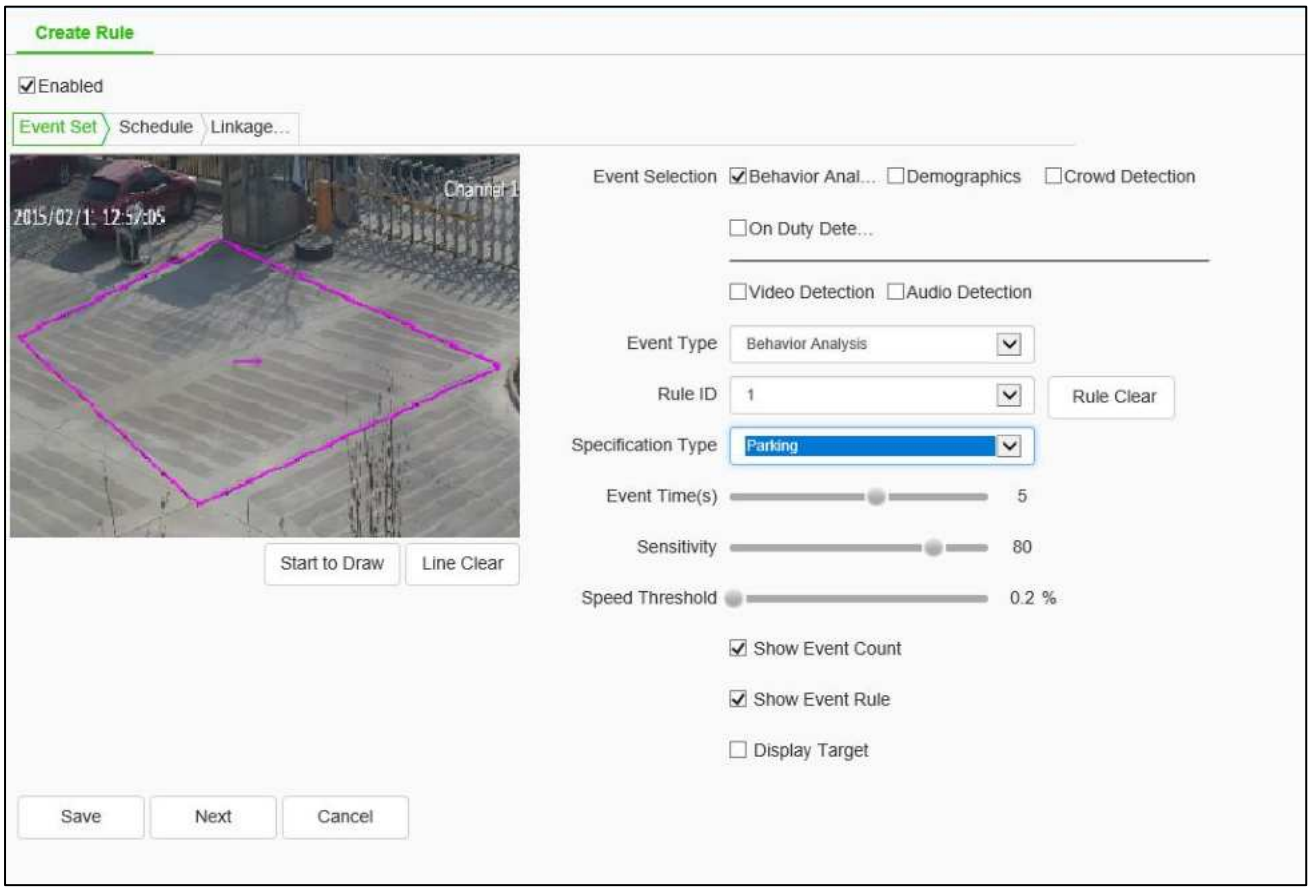

Parking setting interface

(1) Select the rule number, set the event as parking, and check [Enable] to enable the rule.

(2) Draw the parking detection area.

(3) Set the alarm time: indicate that an alarm will be triggered when the target is kept in the parking state in the picture for the time specified.

(4) Set the speed threshold to indicate that the target will enter the parking state when the moving speed (percentage / second) in the screen is less than the speed.

(5) Click save after setting.

[Event Type] = > [Behavior Analysis] = > [alert]

(1) Select the rule number, set the event as alert, and select enable the rule effectively.

(2) Draw alert detection area.

(3) Set the sensitivity. The larger the value is, the more sensitive it is.

(4) Click save after setting.

[Event Type] = > [Behavior Analysis] = > [heat map]

(1) Select the rule number, set the event as the heat map, and select valid to enable the rule.

(2) Draw the detection area of heat map.

(3) Set the minimum moving distance per second, which means that the target's moving speed (area percentage / second) in the screen is greater than the speed, and then it enters the running state.

(4) Set whether to display alarm statistics, display alarm rules, two-way alarm and display target.

(5) Click save after setting.

[Event Type] = > [face detection]

(1) Draw the face detection area, click the "start drawing" button, draw the area, double-click to make the boundary automatically connect the head and tail.

(2) Set the maximum and minimum face size to represent the percentage of target width in the screen.

(3) Set the sensitivity. The larger the value is, the more sensitive it is. The detection rate will improve, and the false detection will increase.

[Event Type] = > [Demographics]

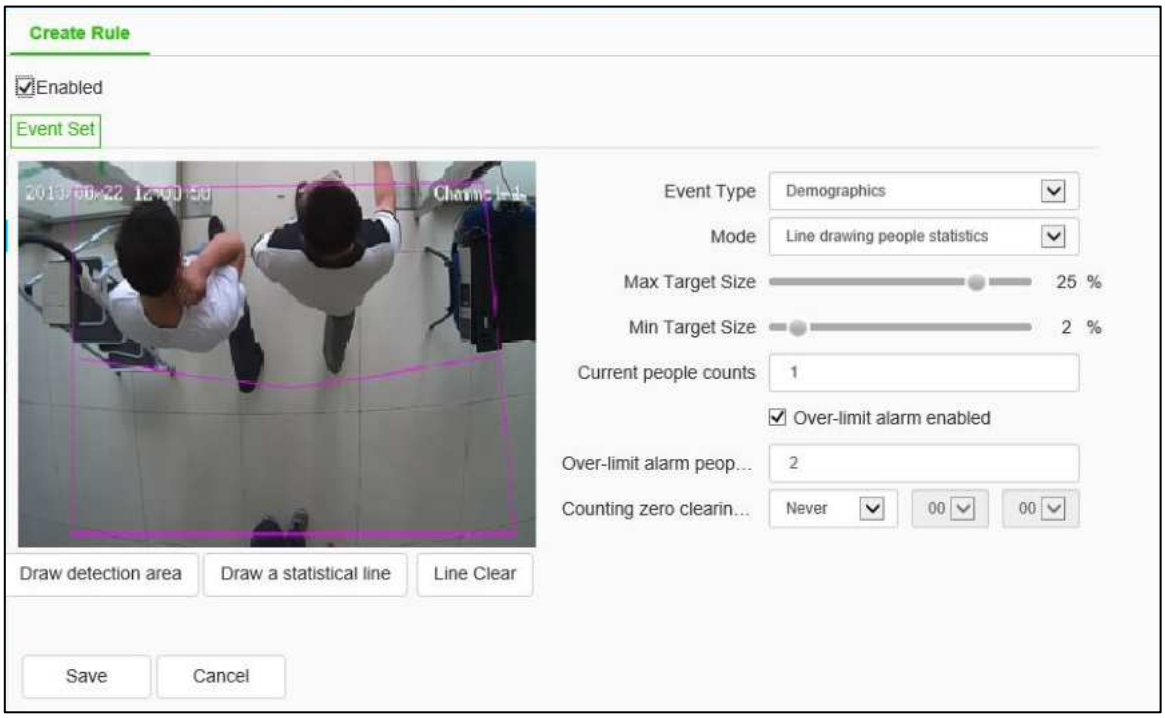

Demographics setting interface

(1) Draw the number detection area, click the "start drawing" button, draw the area, and double-click to make the boundary automatically connect the head and tail.

(2) Draw a statistical area and detection area, which indicates the decision line for the target to enter and leave the area When the people in the detection area pass the statistical line, they will be counted.

(3) Set statistical pattern: vertical people counting, zonal people counting, queue people counting and line people counting.

(4) Set the maximum and minimum target size, which indicates the percentage of the target width in the picture.

(5) Set the current number of people, fixed number of people namely. (only for vertical people counting and line people counting)

(6) Enable alarm for ultralimit, set the upper limit for alarm. If the number of people is larger than the upper limit, an alarm will be given.

(7) Set zero clearing time: zero clearing can be set or not. (only for vertical people counting and line people counting)

(8) Set the sensitivity. The larger the value is, the more sensitive it is. The detection rate will improve, and the false detection will increase.

(9) Click save after setting.

Note:

1. When using vertical people counting, equipment shall be installed vertically. When using other patterns, normal monitoring visual angle can be chosen.

2. Queue people counting is set for queuing scene. It is suggested to use it in the scene.

[Event Type] = > [Crowd Detection]

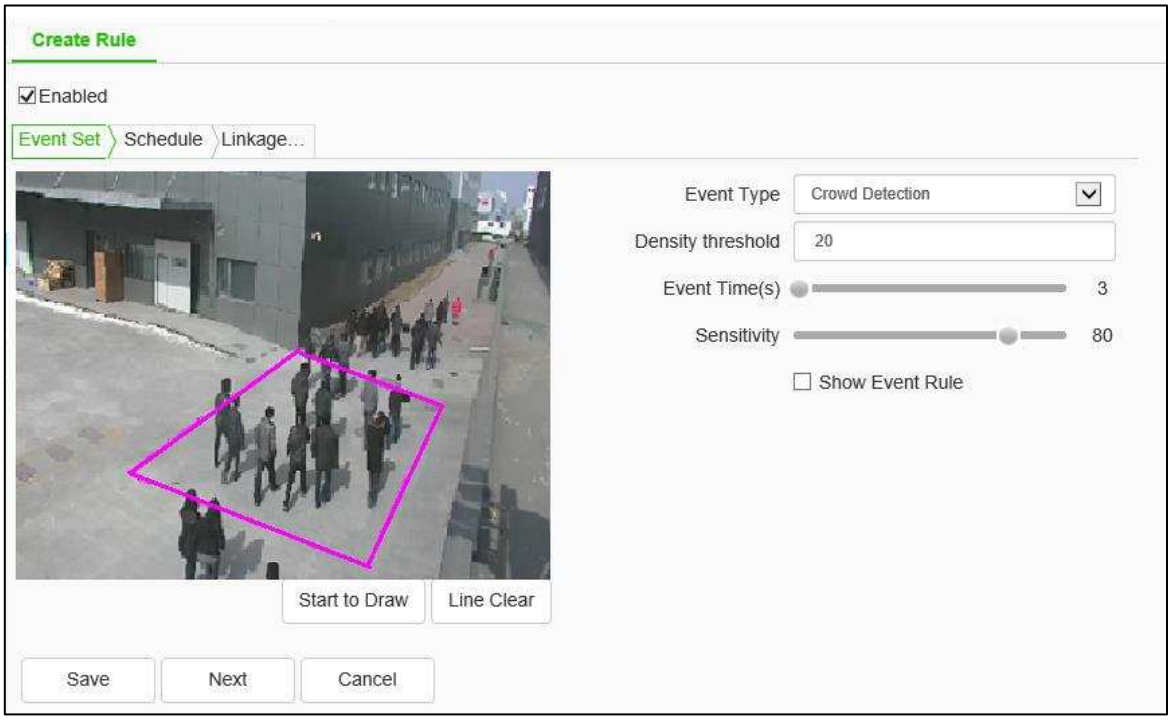

Crowd Detection setting interface

(1) Draw the crowd gathering detection area.

(2) Set password threshold. After the number of people in the zone is larger than that, an alarm will be given.

(3) Set the alarm time, which indicates that the alarm will be triggered after the alarm status continues to reach this time specified.

(4) Set sensitivity. The larger the value is, the more sensitive it will be and the higher detection rate will be; the false detection will increase.

(5) Enable alarm rules for actual need. After enabling the rules, they can be found on preview interface.

(6) Click save after setting.

[Event Type] = > [On Duty Detection]

(1) Draw the position detection area.

(2) Set the number of people on duty, and support single position and double position.

(3) Set the alarm time for leaving position, which indicates that an alarm will be triggered when the target is kept in the state of leaving position for the time specified.

(4) Set the sensitivity. The larger the value is, the more sensitive it is. The detection rate will improve, and the false detection will increase.

(5) Set the maximum and minimum target sizes, which indicates the size (percentage) of the target in the picture.

(6) Click save after setting.

[Event Type] = > [Video Detection]

(1) Set whether to enable virtual focus diagnosis and scene transformation diagnosis.

(2) Set the sensitivity. The larger the value is, the more sensitive it is.

(3) Click save after setting.

(4) **[event type] = > [Audio Detection]**

(1) Set whether to enable signal loss detection and signal abnormality detection.

(2) Set the sensitivity. The larger the value is, the more sensitive it is.

(3) Click save after setting.

Note: after the detailed content is set, it is necessary to set the [Schedule] and [Linkage Mode] equipment to intelligently analyze and alarm linkage. Click [next] to enter [Schedule] setting.

[Schedule]:

Set the effective time of the rule. By default, it is 24 hours a day. Click the blue bar to modify the deployment time, and then click save. Click [Next] to enter [Linkage Mode] setting.

[Linkage Mode]:

Set the alarm linkage function when the alarm occurs. For example: [Alarm Output], [Link Rec], [Linkage Snap], and etc.

Click [Save] to save the parameter settings. Click [Cancel] to restore the last saved parameter.

5.12.3. Shield Area

Shield Area setting interface

As needed, the user clicks the 【start drawing】button to draw in the shielded area. Using [Scene No.] to set the range of shielding area among different scenes.

Click [save] to save the corresponding parameter settings.

Click [Cancel] to restore the last saved parameter.

Attention: When the original scene is changed, it needs to configure the shield area again.

5.12.4. Advance Params

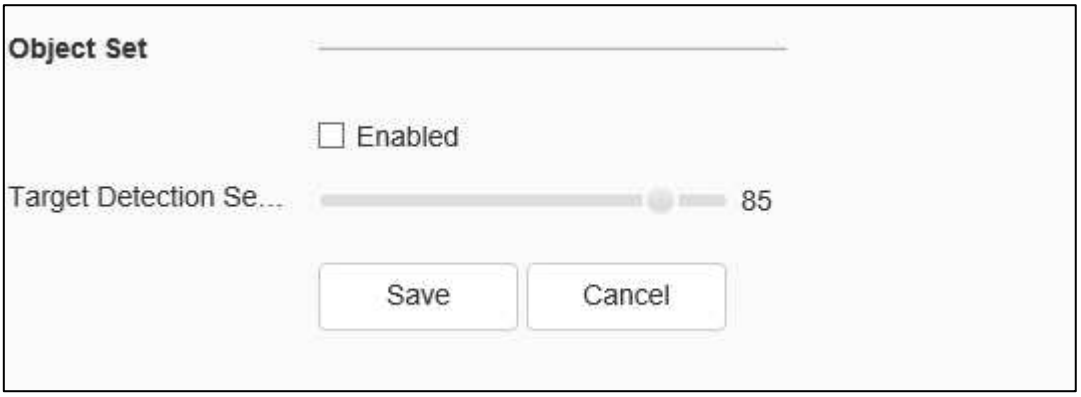

Note: Advanced parameter setting, only under the guidance of the company's technical personnel.

After all the above parameters are set, click Save to save the parameters; click [Cancel] to restore the last saved parameters.

5.12.5. Statistical report

Statistical report ->Demographics

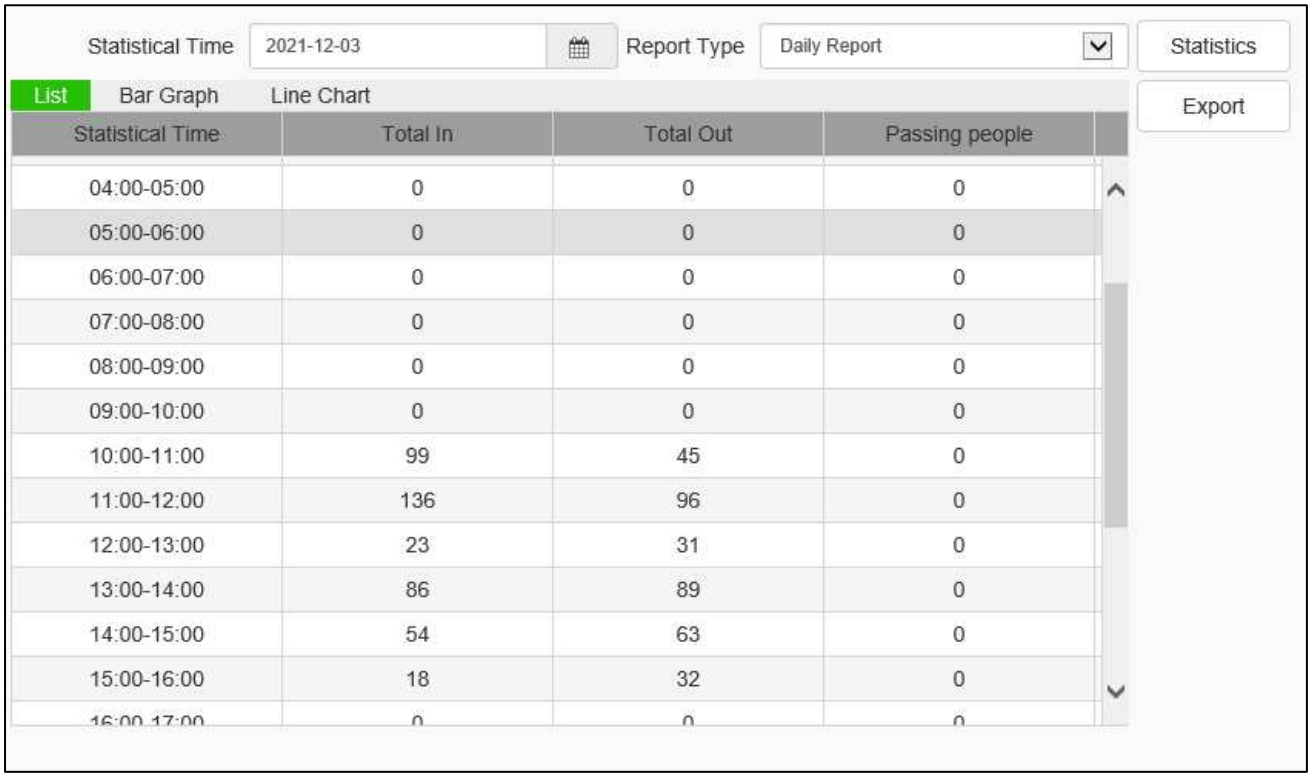

Statistical Time	Total In	Total Out	Passing people
04:00-05:00	0	0	0
05:00-06:00	0	0	0
06:00-07:00	0	0	0
07:00-08:00	0	0	0
08:00-09:00	0	0	0
09:00-10:00	0	0	0
10:00-11:00	99	45	0
11:00-12:00	136	96	0
12:00-13:00	23	31	0
13:00-14:00	86	89	0
14:00-15:00	54	63	0
15:00-16:00	18	32	0
16:00-17:00	0	0	0

Demographics interface

You can choose the starting time of the statistical time, the type of report, the statistics of the number of people entering, the number of people leaving, the number of people passing by and the time information are summarized in a list, bar chart, line chart format, and click “Export” to export the data in Excel.

Statistical report -> Heatmap statistics

Some models support heat chart statistics. Select channel number, report type and statistics time, and click [Statistics] button to perform heat chart statistics on space or time respectively, and display the imaging chart or line chart. Click [export] to export corresponding pictures or reports.

Statistical report ->Face Statistics

Some models support face statistics. Select channel number, report type and statistics time, and click "Statistics" button to perform face statistics on age, gender and number of people respectively, and display statistics list, histogram, line chart or pie chart. Click "export" to export the corresponding XLS file.

Statistical report -> Passenger flow statistics

Select channel number, report type and statistics time, and click export to export the corresponding report.

5.12.6. Online VCA Log

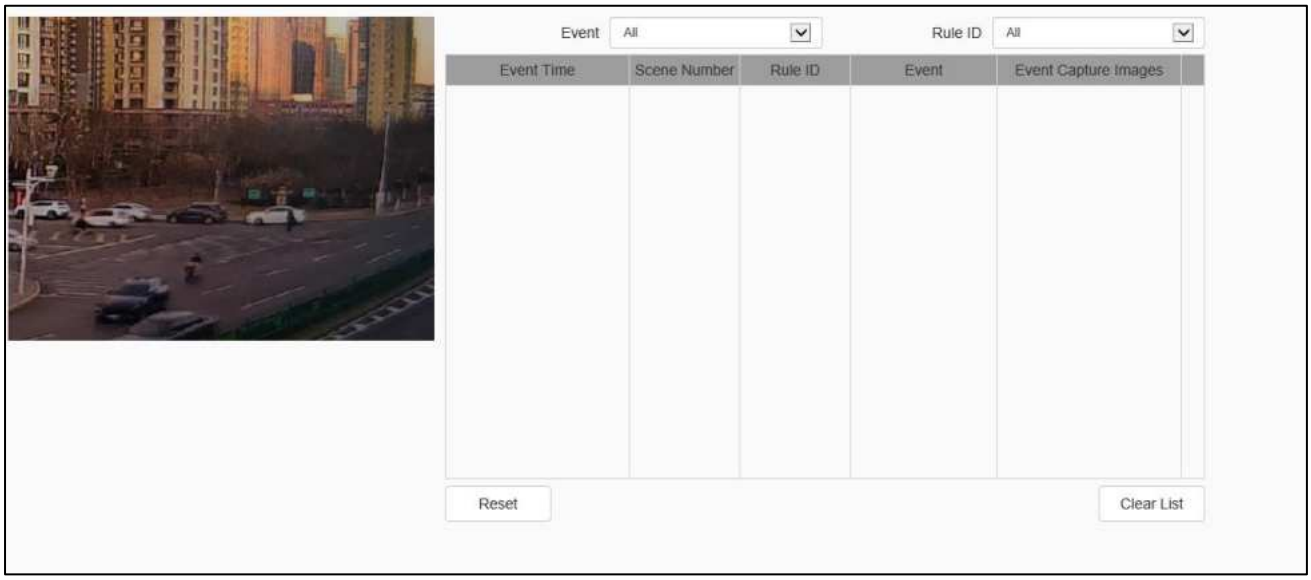

Online VCA log interface

[Scenario Number]: you can select to view the alarm information of intelligent analysis event in a scenario.

[Event]: you can select to view the alarm information of one or all intelligent analysis events.

[Rule ID]: you can select to view the alarm status of some or all rules.

[Reset]: clear the number of events corresponding to the channel rule. When the event occurs again, start counting from 1.

[Clear]: Clear the alarm information displayed in the current list.

5.13Capture facial images

5.13.1. Face Configuration

Face Configuration->Face Detection

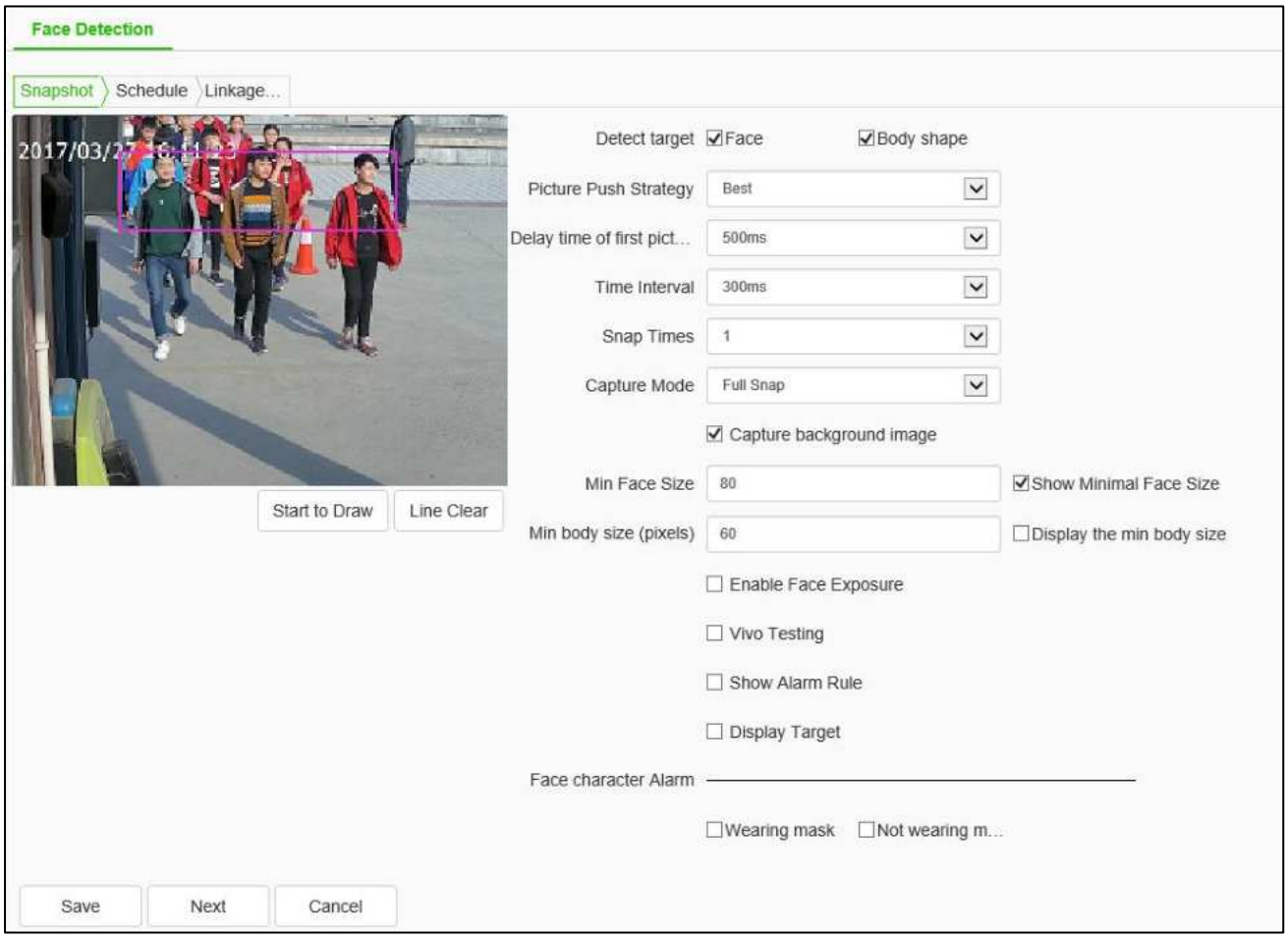

Face Detection interface

[Face Detection]=> [Snapshot]

Users set relevant parameters for snapping settings as needed, such as [Detection Target], [push Strategy], [Snapshot Mode], and so on.

(1) Check the [Detection Target] box. The device supports face and humanoid capture mode.

(2) Set [Detect target][Picture Push Strategy][Snap Times][Min body size (pixels)] and Setup minimal face size.(Different model may be different due to different arithmetic they support, please refer to actual interfaces)

(3) If checked[Capture background image]， When capturing a face / humanoid image, the background image can be captured at the same time.

(4) If check[Enable Face Exposure]， the device supports face exposure, and parameter information such as [Face exposure brightness] and [face exposure time] need to be set.

(5) As needed，Check [Vivo Testing]、[Show Alarm Rule]、[Display Target].

(6) Some devices support the mask algorithm and check the face attribute alarm as [Wearing mask/

Not wearing mask] so that the detection mode of the mask algorithm can be set.

(7) Click save after setting.

Description:

(1) [Picture Push Strategy] = > [Best]: it is necessary to screen out a small face map with the highest comprehensive quality score in this trajectory.

(2) [Picture Push Strategy] = > [Fastest]: it is necessary to select a small face map that meets the comprehensive quality threshold in a short time to push.

(3) [Capture Mode] = > [Full Snap]: it means not controlled by the security boundary and not filtered by the security boundary threshold. All pictures are sent to the push module by default.

(4) [Capture Mode] = > [High Quality]: it refers to filtering according to the default security boundary threshold value of the system, and sending the filtered results to the push graph module.

(5) [Capture Mode] = > [User Defined]: filter according to the security boundary value set by user-defined, and send the filtered result to the push graph module.

（6）[Face Exposure Brightness] refers to the reference brightness of the face exposure. When the face is identified in the preview screen, the device automatically adjusts the face brightness according to the reference brightness value. The larger the face brightness value is, the brighter the whole preview screen is. The parameter should not be set too low or too high.

Face Detection - > Schedule

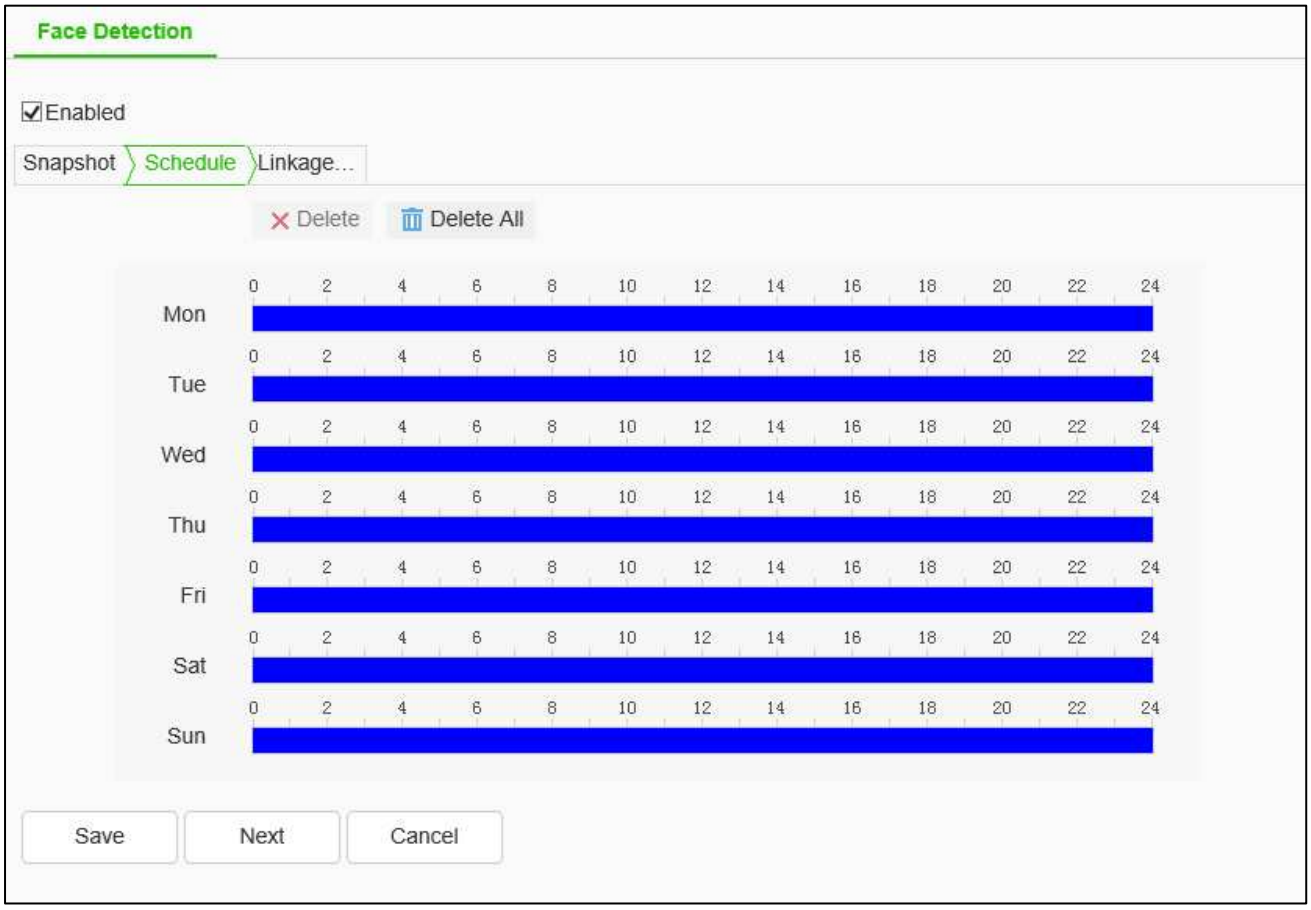

The user can set the [deployment time] as required, and only detect the alarm within the set date and time period.

Face Detection - > Linkage Mode

(1) Set [Linkage Mode]: to realize the alarm linkage after triggering the alarm, such as [Common Link], [Alarm Output], [Link Rec], etc.

(2) Click [Save] to save the corresponding parameter settings. Click [Cancel] to restore the last saved parameter.

5.13.2. Snapshot parameters

Snapshot parameters-> Snapshot parameters

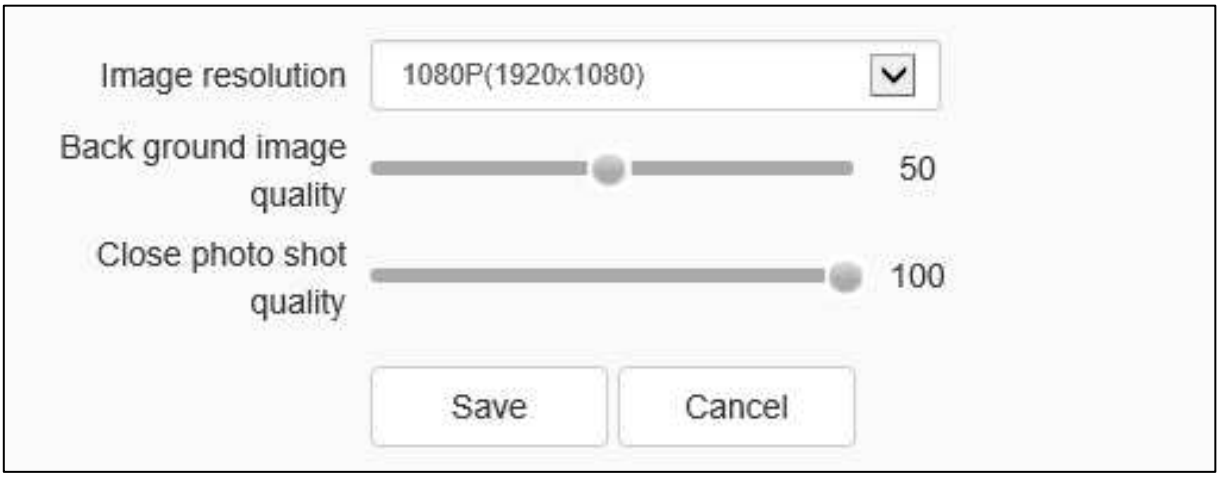

Snapshot parameters interface

Users set [Image Resolution], [JPEG quality] and [Image size limit (KB)] as needed.

[image resolution]: sets the image resolution, which supports 1440p, 1080p, 960p and other resolutions.

[Background image quality]: set the quality of background image. The larger the value is, the higher quality will be.

[Close photo shot quality]: set the quality of close-up image. The larger the value is, the higher quality will be.

Click [save] to save the corresponding parameter settings.

Click [Cancel] to restore the last saved parameter.

Snapshot parameters->Image superposition

Image superposition can be in regular mode or self-defined mode.

In regular mode, OSD information superposition on background image is supported. Small target map is shown on background image.

Note: In regular superposition mode, superposition is on preview interface. That can be modified by clicking “Audio / video parameters” -> “Character superposition”.

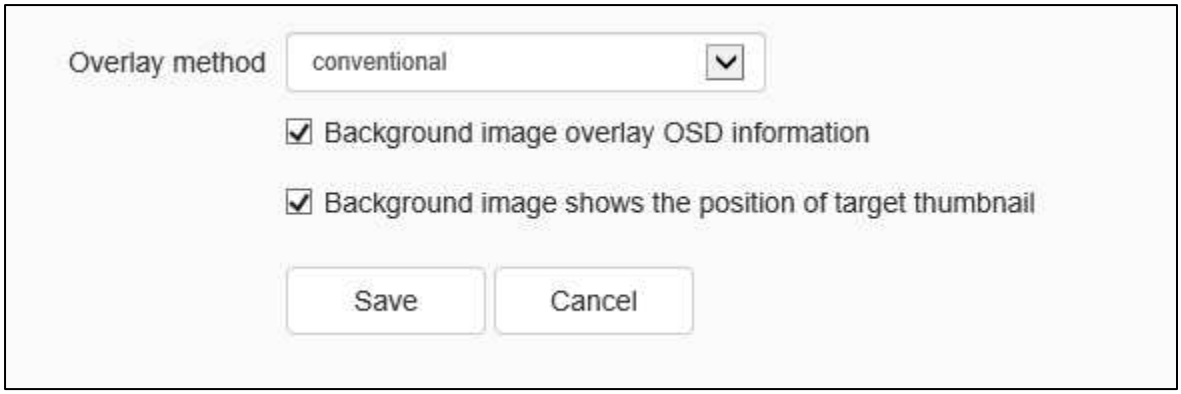

Image superposition (conventional) interface

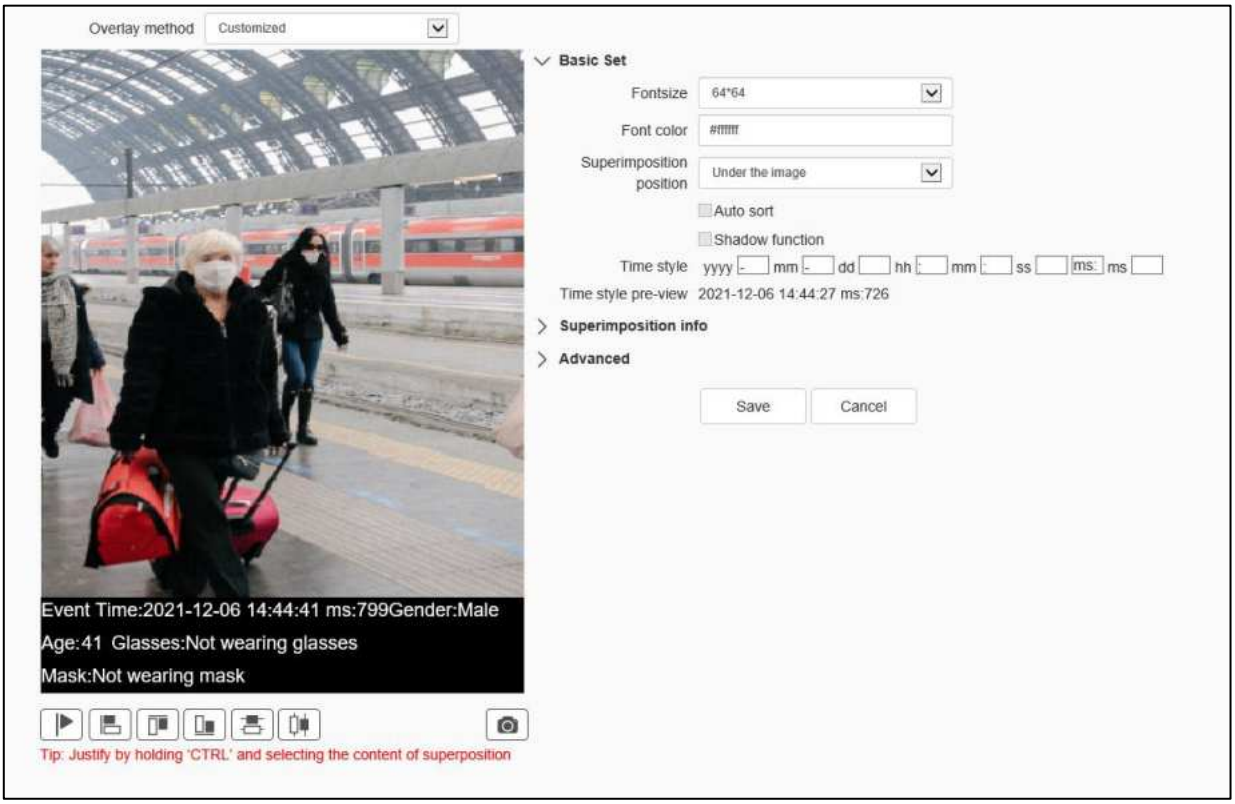

Image superposition (Customized) interface

The function description of the interface icon button is as follows:

Icon	Description
	Snapped Photo：Check the overlay effect for trial
	Default positions： Sets the storage location of snapshots for trial
	Left justified：Justify by holding ‘CTRL’ and selecting the

Icon	Description
	content of superposition
	Top：Justify by holding ‘CTRL’ and selecting the content of superposition
	Bottom：Justify by holding ‘CTRL’ and selecting the content of superposition
	Horizontal Equidistance：Justify by holding ‘CTRL’ and selecting the content of superposition
	Vertical Equidistance：Justify by holding ‘CTRL’ and selecting the content of superposition

Image superposition]=>[Basic Set]

Users set parameter information such as [Fontsize], [Font color], [Superimposition position], [Time style] as needed.

[Fontsize]： 16*16、24*24、36*36、48*48 and 64*64 are supported.

[Font color]： After clicking the text box, the color setting interface appears, slide mouse to select the appropriate color, Click other position to quit from the font and color setting.

[Superimposition position]： Support the mode of in the picture, above the picture under the picture.

[Auto sort]： Turns on / off the automatic sorting function, which is valid when the overlay position is "in the picture".

[Shadow function]： Sets the shadow effect, which is effective when the overlay position is "in the picture".

[Time style]： Set the time model. View the effect in the time style Preview below.

The function description of the interface icon button is as follows:

Icon	Description
	Shift up： Select the overlay information and click this button to move the overlay information up one bit.
	Shift down： Select the overlay information and click this button to move the overlay information down one bit.

Click [Save] to save the corresponding parameter settings.

Click [Cancel] to restore the last saved parameter.

[Image superposition]=>[Superimposition info]

The overlay information set by the user as needed. Multiple selection is supported for overlay information. Select [All] to select all overlay information.

[Comment]： Modify according to the needs of users.

[Number of feed line characters]： Sets the maximum number of words per line.

[Number of starting spaces after line feed] Sets the position where the overlay content begins after the text wraps.

Click [Save] to save the corresponding parameter settings.

Click [Cancel] to restore the last saved parameter.

[Image superposition]=>[Advanced]

[Background image shows the position of target thumbnail]： Choose whether to overlay the background image in the picture to display the location of the target screenshot (shown when the face is captured).

Click [Save] to save the corresponding parameter settings.

Click [Cancel] to restore the last saved parameter.

5.13.3. Advance Params

Advance Params setting interface

Users can set the size of the target picture according to their needs, which can be divided into big head photos, bust photos, full-length photos and custom photos. When users choose to customize the size of the target picture, they can set the width of the picture, the height of the face part and the height of the body part.

Click [Save] to save the corresponding parameter settings.

Click [Cancel] to restore the last saved parameter.

5.13.4. Statistical report

Statistical report -> Face Statistics

Users set the way of face statistics according to their needs, including target features and spatial statistics.

[Face Statistics]=>[Target Characteristics]

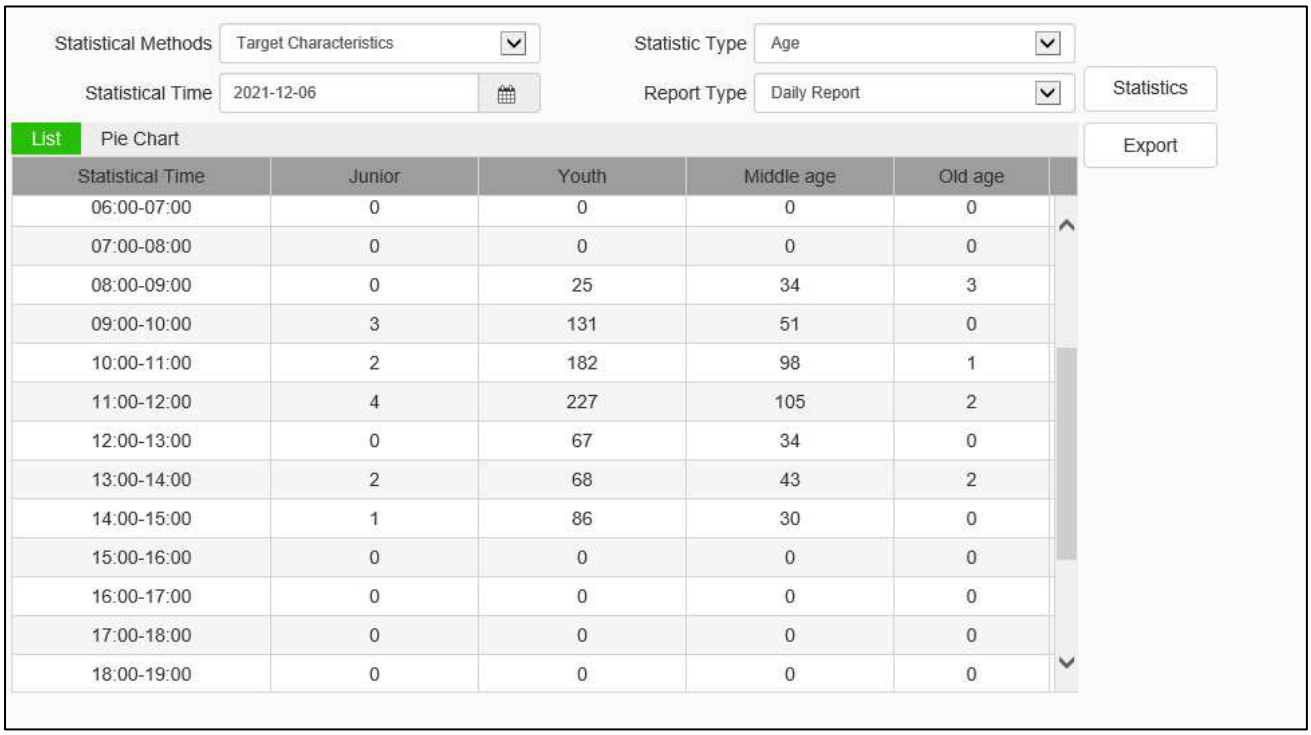

Statistical Time	Junior	Youth	Middle age	Old age
06:00-07:00	0	0	0	0
07:00-08:00	0	0	0	0
08:00-09:00	0	25	34	3
09:00-10:00	3	131	51	0
10:00-11:00	2	182	98	1
11:00-12:00	4	227	105	2
12:00-13:00	0	67	34	0
13:00-14:00	2	68	43	2
14:00-15:00	1	86	30	0
15:00-16:00	0	0	0	0
16:00-17:00	0	0	0	0
17:00-18:00	0	0	0	0
18:00-19:00	0	0	0	0

Target Characteristics setting interface

Users can set statistical types according to their needs, and can make target statistics according to age, sex, number of people and ethnic groups.

[Statistic Type]： Four types of display are supported: [Age], [Gender], [Number] and [Nationality]. The display methods support List, Pie Chart, Bar Graph, and Line Chart and so on.

(1) [Age]： The main results are as follows according to the age type, which can be divided into four statistical methods of Junior, Youth, Middle age, and Old age. It can be displayed in two ways: list and pie chart.

(2) [Gender]: According to the gender type to carry out statistics, it can be divided into three statistical methods of Male, Female, Unrecognized. It can be displayed in two ways: list and pie chart.

(3) [Number]: If the statistics are carried out according to the type of population, the number of people in a certain period of time is counted according to the type of report. It can be displayed in three ways: list, bar chart and broken line chart.

(4) [Nationality]: If statistics are carried out according to ethnic types, they can be divided into two statistical methods: Han Nationalitu and Minority. It can be displayed in two ways: list and pie chart.

(5) [Nationality]: The user sets the report statistics time as needed.

(6) [Report Type]: Users set up report types according to their needs, which can be divided into four types: daily report, weekly report, monthly report and annual report.

Click the [Statistics] button to count the parameter information.

。 Click the [Export] button to export the corresponding statistical results.

[Face Statistics]=> [Spatial statistics]

Users can set up statistical types according to their needs, and can carry out spatial statistics according to age and sex respectively.

Click the [Statistics] button to get the statistical parameter information.

Click the [Export] button to export the corresponding statistical results.

Intelligent Retrieval -> Pedestrian statistics

Users carry out pedestrian statistics according to their needs, which can be done according to gender and number of people.

Click the [Statistics] button to get the statistical parameter information.

Click the [Export] button to export the corresponding statistical results.

5.14Face recognition

5.14.1. Face Library

Face Library-> Management of Face Library

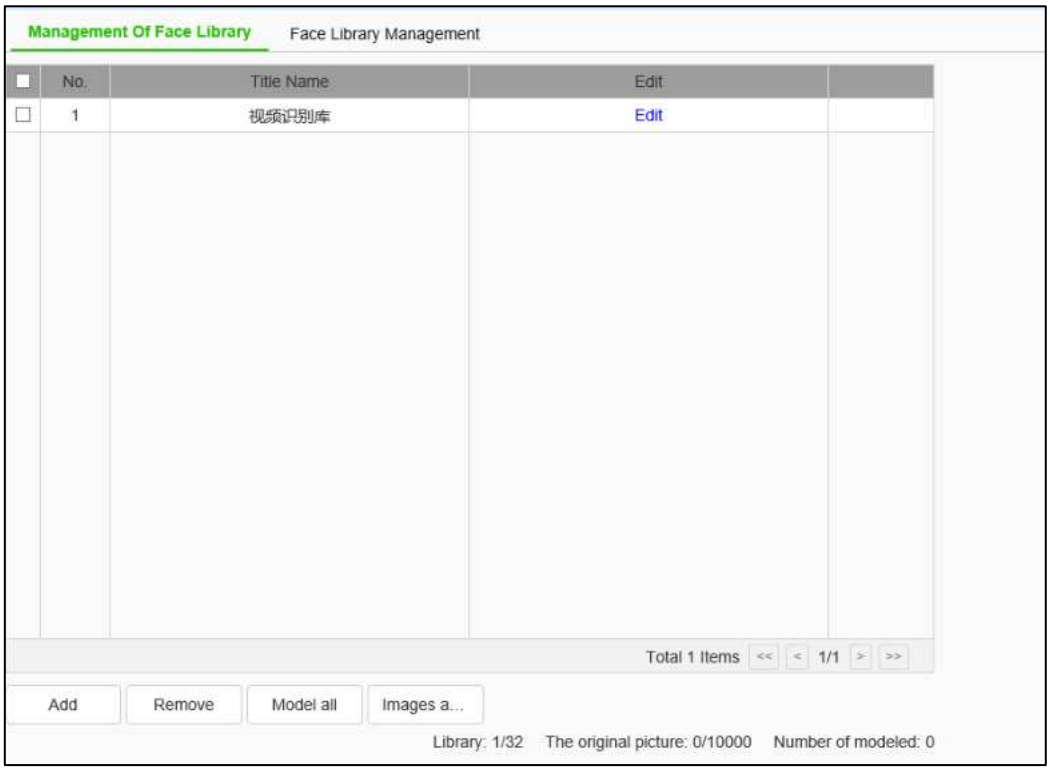

Management of Face Library setting interface

Face database can be edited, such as [Add]、[Delete]、[Edit]、[All Modeling]、[Unmodeled Picture Modeling] according to their needs.

[Add]: Click the button to add a face database. User should fill in the face database's [name], and set up the [uploading recognition], [similarity] and [description]. Click the [Confirm] button to save the settings. Add the base face images on the "Face Database - Face Base Database Management" interface.

[Delete]: To delete the face database. Check the face database, then, click the [Delete] button.

[Edit]: In the face database list, click [Edit] to pop up the prompt box to modify the face database name and description, edit the new face database name and description respectively, and then click the [OK] button.

[All Modeling]: Click on all Modeling buttons to model the base face images of all libraries. After adding the base face images, please check the face database and click the [All Modeling] button. If the face database has been modeled, but the face database has added a base face image, please click on the [Unmodeled Picture Modeling].

Face Library->Face Library Management

The face base map is the basis of the face recognition algorithm. You can perform [Look up], [Look up], [Add] Face Base-map, or batch [Import] Face Base-map.

[Search Method]: Set the search conditions first, then click the [Search] button. Clickordisplay or hide search conditions. After searching the base face images, we can [delete], [export], and [copy the current face database base face images to] other people's faces database.

[Adding method]: First select the face database, then click the [Add] button, set and upload the base face image information, click the [confirm] button, and save the base face image to the current face database.

[Import]： Files in .jpg .png format can be imported. It is recommended to import no more than 500 copies each time, and picture size should be between 100*100 and 800*800.

Face Library Management (look up) setting interface

[Delete Method]: Select the bottom image first and click the [Delete] button

[Export Method]: Select the bottom image first and click the [Export] button.

In the [Edit] window, you can edit the base map information

Icon	Description
	Detailed list of face libraries

Icon	Description
	Face library icon list
	Display search conditions
	Hide search conditions

5.14.2. Face Configuration

Face Configuration-> Face Detection

[Face Detection]=> [Snapshot]

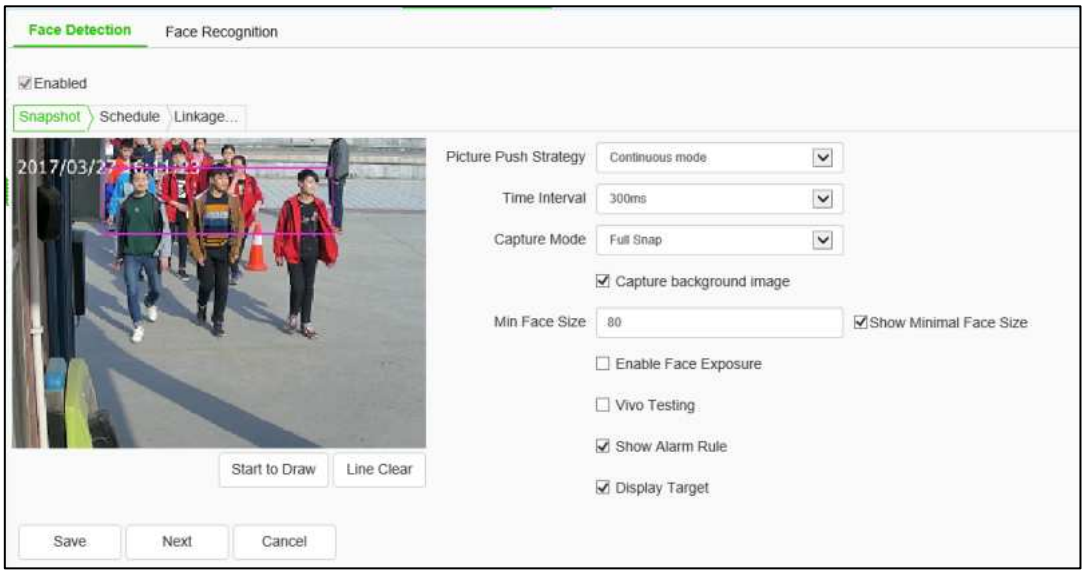

Snapshot setting interface

(1) Draw the face detection area and click [Start to draw] button to draw the area. Click the left mouse button to draw the turning point or end point of the line and click the right mouse button to finish the drawing.

(2)Set [Arithmetic] [Push Strategy] [Snap Times] [Snap Mode] [Capture background image] [Face Exposure] and Setup minimal face size. (Different model may be different due to different arithmetic they support, please refer to actual interfaces)

(3) Set the minimum face size, indicating the percentage of the target width in the picture

(4) Click save after setting.

Face Configuration-> Face Recognition

[Face Recognition]=> [Alarm of discerning]

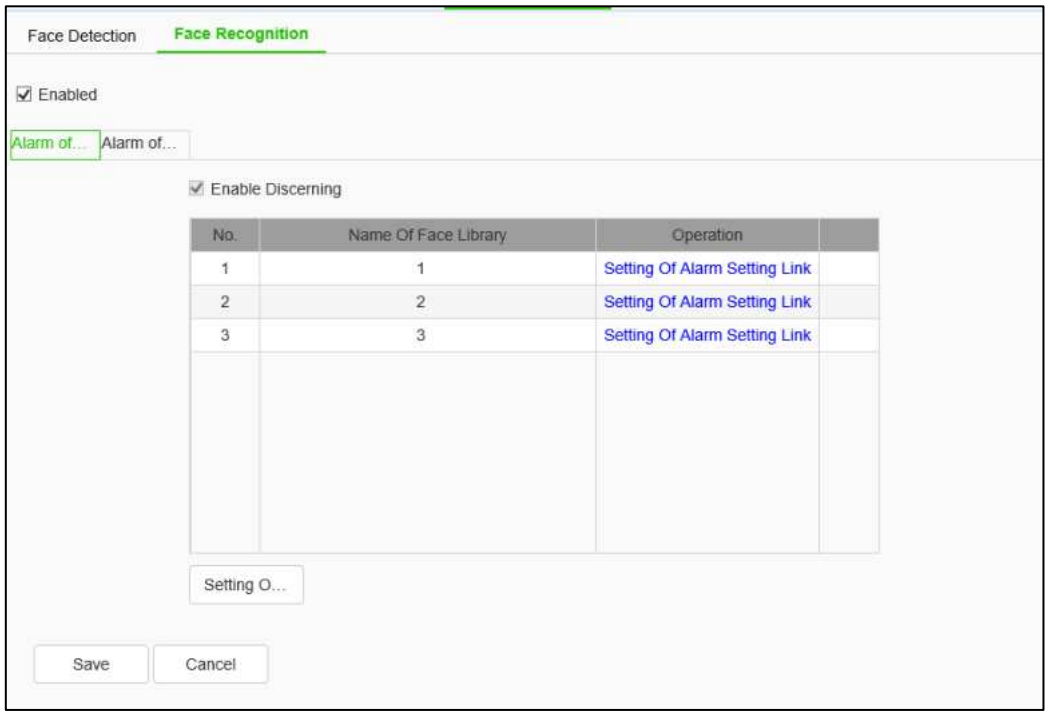

Alarm of discerning setting interface

(1) Enable comparison, enable comparison or close the current channel comparison alarm function.

(2) Uploading the identification information, whether to enable the upload identification information function.

Click the [Setting of Alarm Setting Link] button to pop up the prompt box for the arming linkage setting. Support five types of alarm linkage [PTZ], [Record], [Snapshot], [Common Link]. If there is no face database selected in the face database table, the button is grayed out and cannot be set.

Click the [Save] button to save the effect.

Click the [Cancel] button to restore the last saved parameter.

[Face Recognition]=> [Alarm of rate]

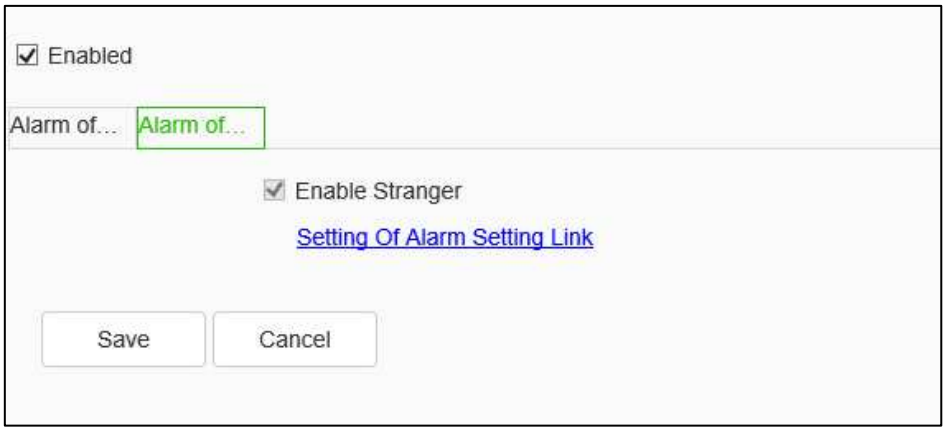

Alarm of rate setting interface

(1) Enable strangers, enable strangers or turn off the current channel stranger alarm function.

(2) Click the [Setting of Alarm Setting Link] button: pops up the prompt box for the arming linkage setting.

Click the [Save] button to save the effect.

Click the [Cancel] button to restore the last saved parameter.

5.14.3. Snapshot parameters

See 5.13.2 Snapshot parameters.

5.14.4. Statistical report

See5.13.4 Statistical report.

5.15Storage

5.15.1. Schedule Recording

Schedule Recording - > Schedule Recording

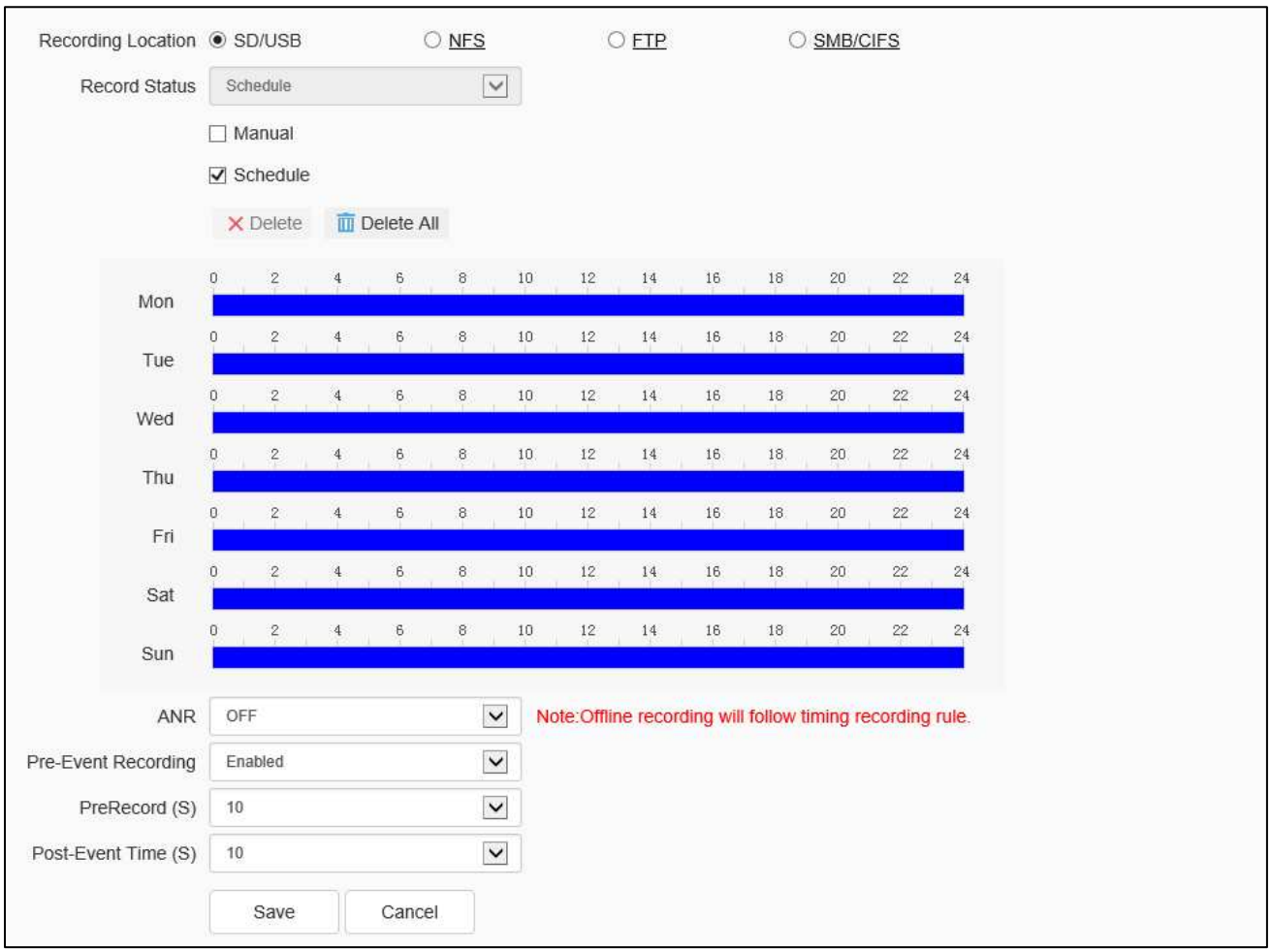

Schedule Recording setting interface

Switch the drop-down box to select the target video recording type, set the deployment time, retention time (days), and select the pre-recording time and delay recording time.

[Record Status]: display the current equipment recording status.

[Record Start]: click the device to start recording after the test starts, and click the test stop to stop recording.

[Schedule]: four time periods can be set for timing recording, and the timing recording time period parameters can be set to the selected week.

[ANR]: when the network is disconnected, the video shall be recorded according to the time period of timed video recording.

Click [Save] to save the set [recording strategy] parameters, click [Copy To] copy the parameters of the current port number to other port numbers, and click [Cancel] to restore the last saved parameters.

Note: the equipment is required to support front-end storage for off network recording, and the timed recording fails after the off network recording is turned on.

Schedule Recording - > Packaging Mode

Packaging policy setting interface

(1) Choose packing method: packing by time and packing by size. NVR will pack the video files according to the set time or size, and then start recording new video files.

(2) Select the processing mode of the system when the disk space is insufficient, such as "cycle delete", "cycle delete (except for alarm file)" or "stop recording".

(3) Click [Save] to save the corresponding parameter settings. Click [Cancel]to restore the last saved parameter.

5.15.2. Snapshot

Snapshot setting interface

(1) After the [Timing Capture] is enabled, set the snapshot [interval] time.

(2) [Interval]: enter the time interval in the input box, and switch the drop-down box to select the

interval unit.

(3) Check [FTP], take a picture and upload it to FTP server.

(4) Check [Email], take a picture and send it to the designated email.

[Test]: perform a snapshot operation to test the snapshot settings.

[Save]: save the above snapshot settings.

[Cancel]: restores the last set parameter.

5.15.3. Disk management

Disk Management - > Disk Information

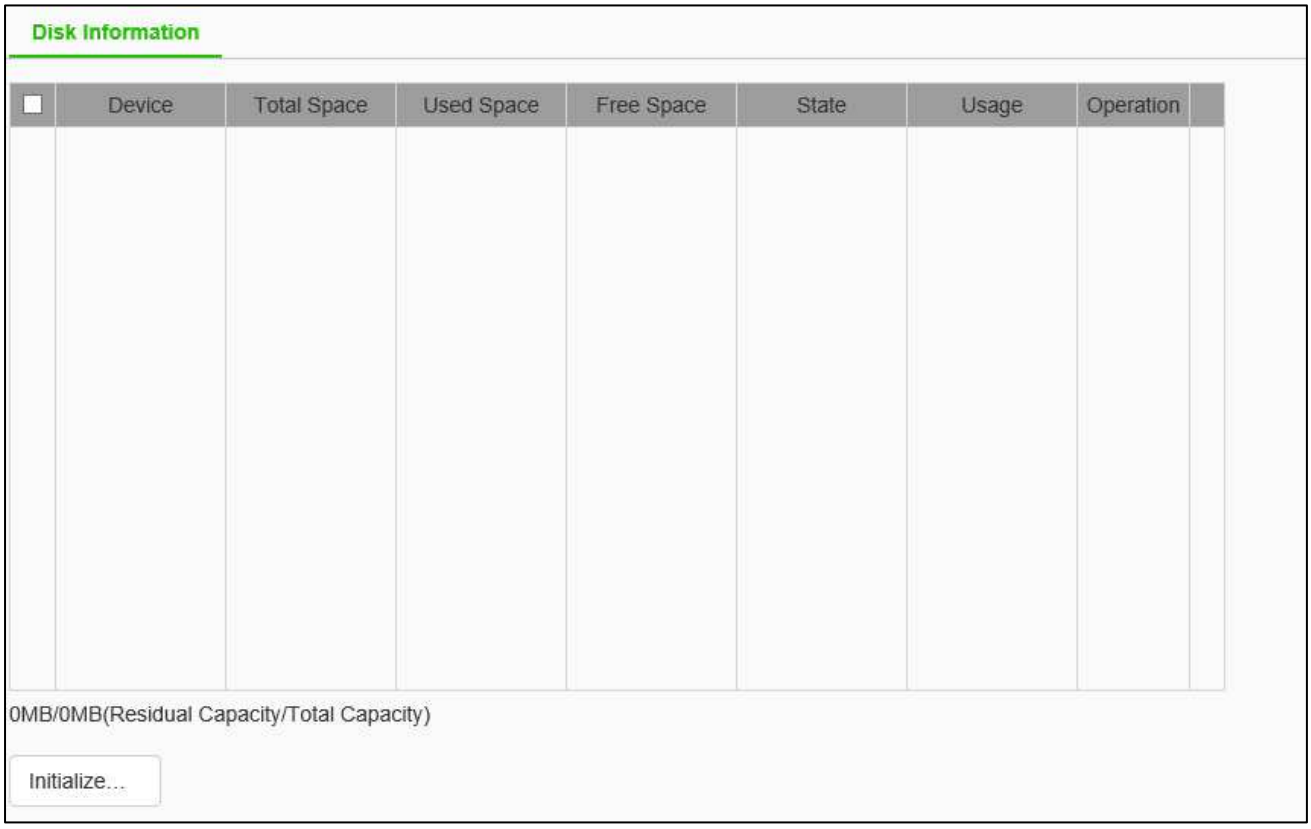

Disk information interface

The remaining capacity and total capacity of the current hard disk and virtual disk can be displayed in the interface, and the purpose of the disk can also be set. There are four options for the purpose of the disk: recording, backup, redundancy and read-only.

[Initialize Disk] select a disk in the disk list and click the "initialize disk" button. The system will pop up a prompt whether to initialize the disk. Click "OK" to initialize the disk.

Disk management - > Disk Policy

Some models support disk policy.

[Video Quota]: set the amount of disk space occupied by video files, in GB. If it is 0, it means that the device dynamically allocates space.

[Image Quota]: set the size of the disk space occupied by the snapshotd image file, unit: GB. If it is 0, it means that the device dynamically allocates space.

[Save]: save the settings.

[Cancel]: restores the last saved settings.

Disk management - > Storage Policy

Some models support storage policies.

Enter the conditions that trigger the [save policy], in the edit box of[remaining disk space]. When the remaining disk space reaches the set value, there are three [save policies] :

(1) Stop recording: no more video packaging operation;

(2) Circular deletion: delete the earliest video file to create space for the latest video;

(3) Cycle delete (except alarm file): delete the earliest video file (except alarm video) to create space for the latest video. Click save after setting to take effect.

5.15.4. NFS

NFS->NFS

NFS setting interface

[IP Address]: set NFS server IP address.

[Mapping Path]: set the disk mapping path.

[Save]: Click the [Save] button to save the settings.

[Test]: test whether the current configuration can be used normally.

NFS->FTP basic setting

FTP basic setting interface

Change 【Service Type】 Choose FTP protocol type as FTP or SFTP.

NFS- > FTP Network Storage

FTP setting interface

After changing [Server URL], [Port], [Path], [User Name] and [Password], [Save] can set the FTP server information. [Cancel] restore the last saved parameter.

[Test]: test whether the settings are correct and effective.

FTP - >Face/traffic FTP

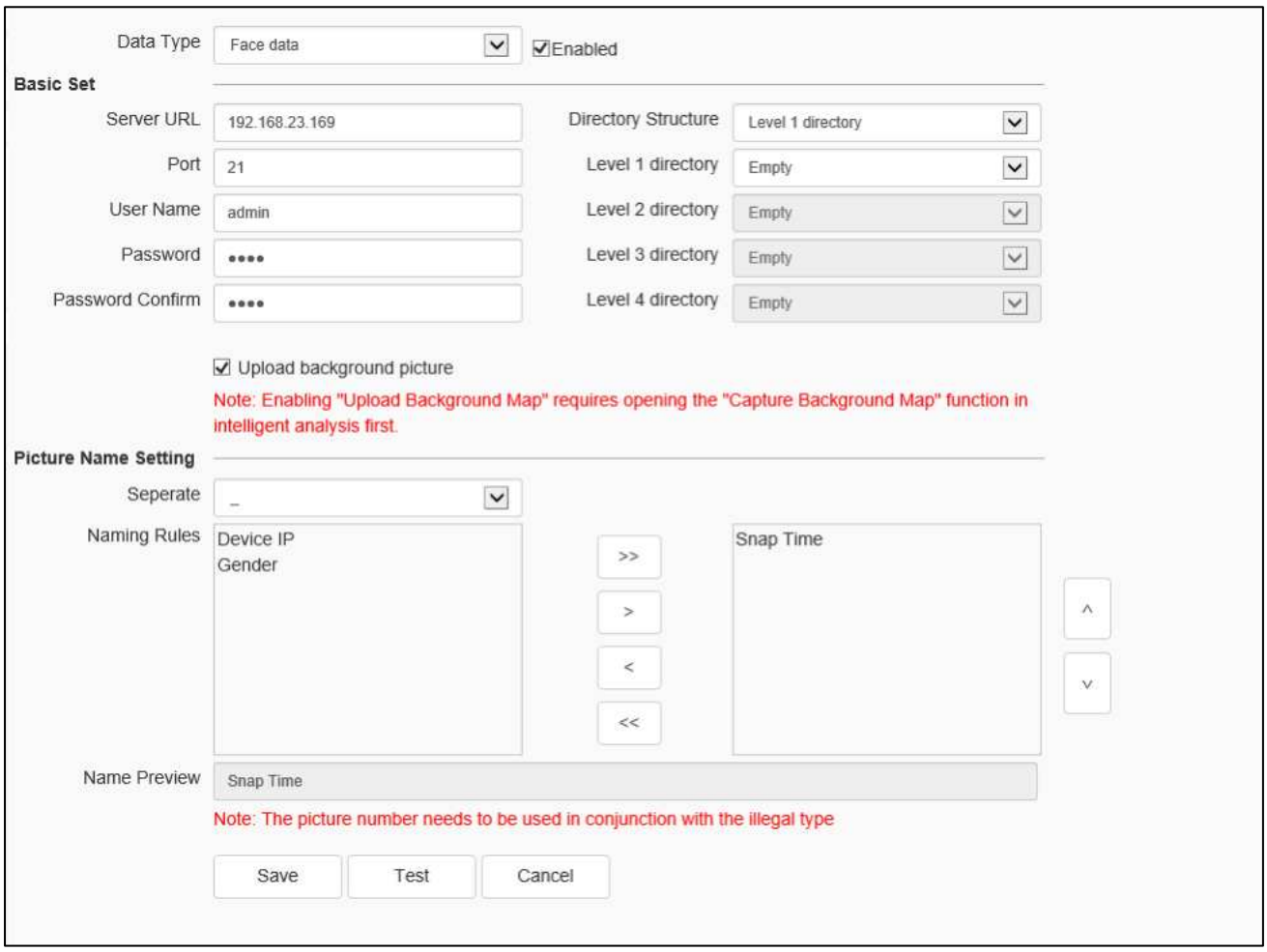

Face FTP setting interface

Users set face-specific FTP according to their needs, such as [Data Type]、[Server URL]、[Directory Structure and so on.

[Data Type]：Face data is supported.

Basic settings: configure FTP server address and catalogue structure

[Server URL]： You need to enter an address in the form of IP.

[Port]： The port number is a numeric value between 1 to 65535.

[User Name]： 15 characters are accepted.

[Password]： Enter up to 15 characters.

[Password Confirm]：Enter the same content as the password, and when the input is different from the password, a check prompt box will pop up.

[Upload background image]: Enable / disable the function of uploading background image. Note: to enable the function, it is needed to enable “capture background image” function in intelligent analysis at the same time.

[Directory Structure]： Five directory structures are supported: root directory, first-level directory, second-level directory, third-level directory and fourth-level directory.

[Level 1 directory]：Toggle the drop-down box to select the directory option, which is the same as the contents of other directories.

Image name setting: set the name of image captured.

[Separate]：There is a default delimiter and manual modification is not supported.

[Naming Rules]：You can modify it manually to set a new naming rule.

[Name Preview]：Displays the content to the right of the naming.

Icon	Description
>>	Right shift all
>	Right shift
<	Left shift
<<	All left shift
^	Shift up
v	Shift down

[Save]: save the current settings.

[Test] Test whether the settings are correct and effective.

[Cancel]: restores the last saved parameter.

NFS- >HTTP/HTTPS Push Configuration

Destination IP or do...	URL	Protocol	Port	Test	Operation
0.0.0.0	/	https	80	Test	Clear
0.0.0.0	/	https	80	Test	Clear
0.0.0.0	/	https	80	Test	Clear

Save Cancel

HTTP/HTTPS push configuration interface

[Target IP or domain name]: the IP or domain name of server

[URL]: fill in URL address

[Protocol]: configure the type of protocol

[Port]: the port number of target server

[Test]: test whether path of chain is accessible

[Operation]: clear the settings

NFS ->SMB/CIFS

IP Address 0.0.0.0

Mapping Path smb-test

User Name admin

Password •••••

Save Test Cancel

SMB/CIFS setting interface

[IP address]: set the IP of server that shared folder is in

[Mapping path]: set the path of shared folder

[User name]: set server login IP

[Password]: set login password of the server

[Save]: save the current configurations.

[Test]: test whether current configurations can be used normally.

5.16System

5.16.1. System

System - >Allocation of resources

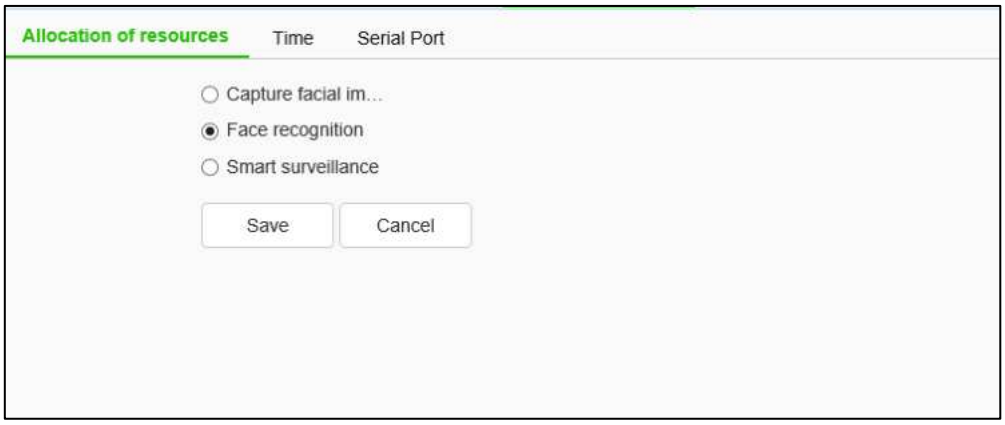

Allocation of resources interface

The user can modify the method of allocating resource, if the device supports Capture facial images, Face recognition, and Smart surveillance.

Click [Save]button and the device will restart

Click [Cancel] to restore the last saved parameter.

System - > Time

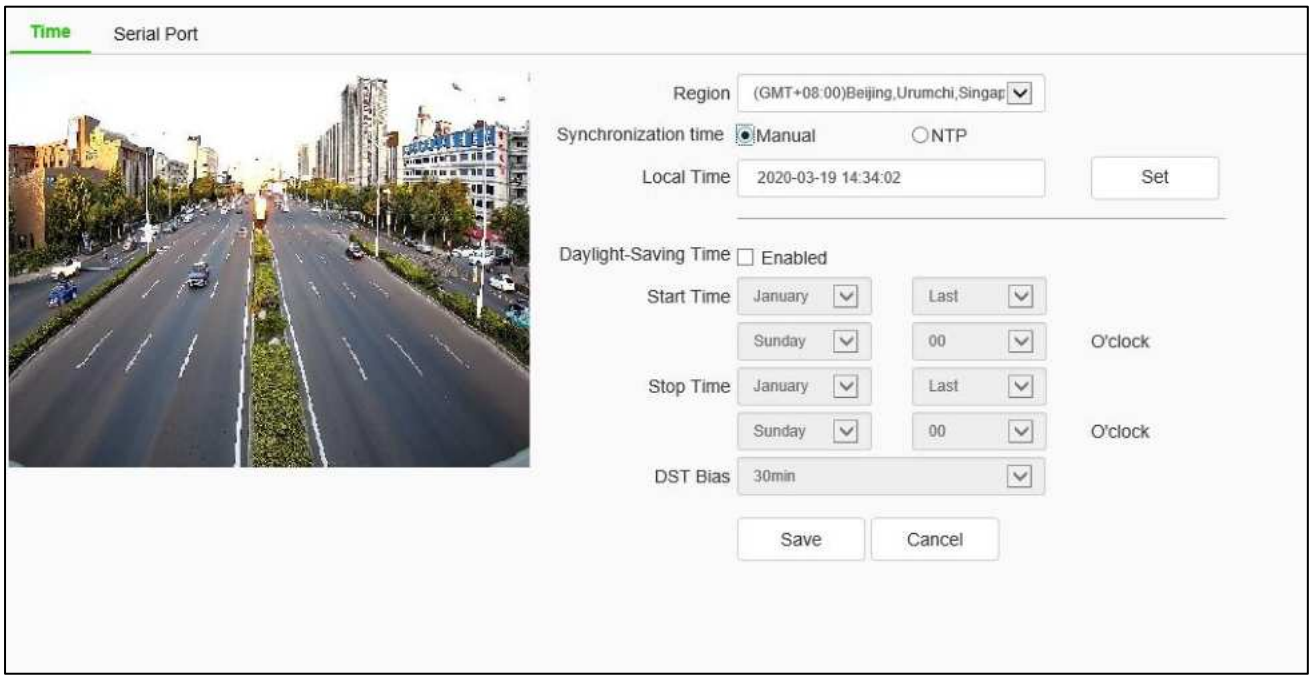

Time setting interface

Time zone: set the time zone information.

[Local Time]: real time display of local time.

[Synchronization Time]: the synchronization equipment time is the same as the local time.

[Daylight-Saving Time]: set whether daylight saving time is enabled. Set the time range and offset time for daylight saving time.

[NTP server]: enter the legal IP address of the server.

[Port]: enter the corresponding port number.

[Time Interval]: enter the interval of automatic time calibration.

[Test]: Test NTP automatic timing.

Click [Save] to save the currently set parameters.

Click [Cancel] to restore the last saved parameter.

System - > Serial Port

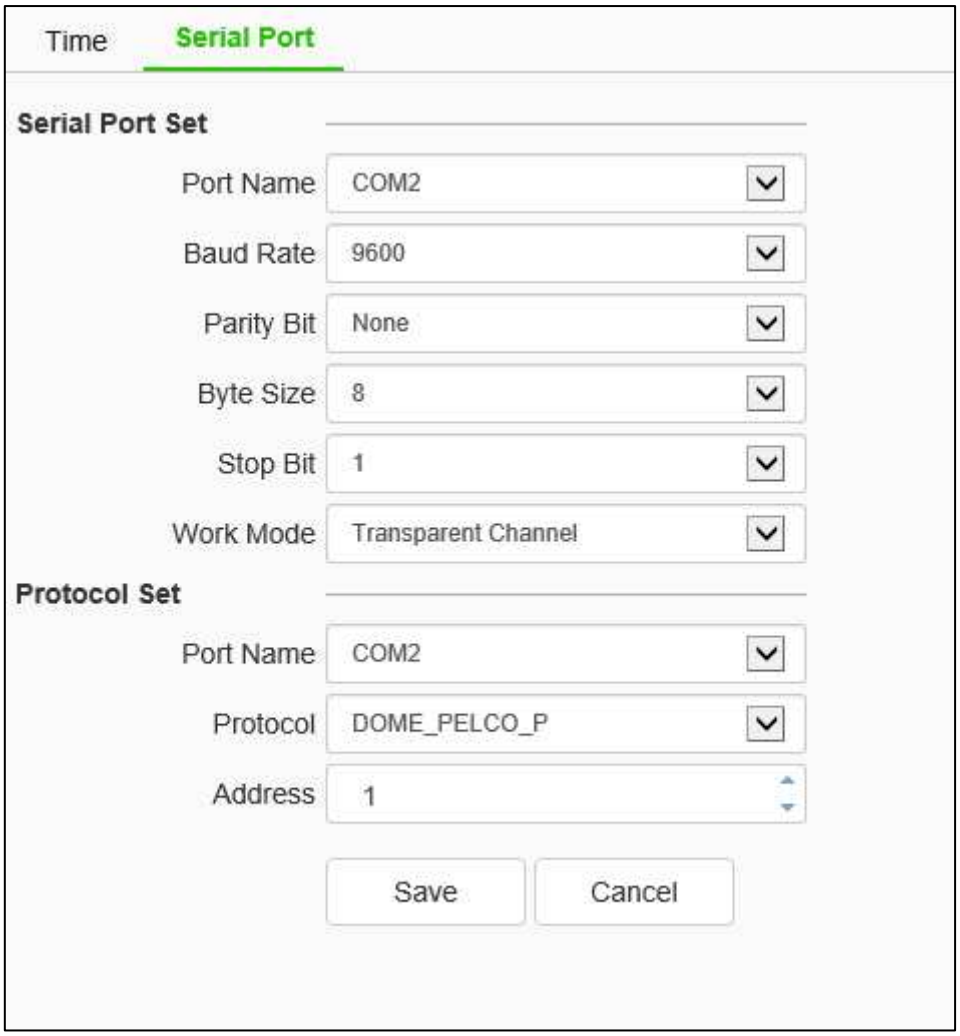

Serial port setting interface

Some models support serial port settings. It is divided into [serial port setting] and [protocol setting].

[Serial Port Set] requires the user to select [serial port number], [baud rate], [check bit], [data bit], [stop bit] and [working mode].

For [Protocol Set], you need to select [channel number], [serial port number], [protocol] and [address].

Note:

(1) Because the functions of different models are different, please refer to the actual interface.

(2) Some models support the baud rate option.

5.16.2. Users

Users - > Users

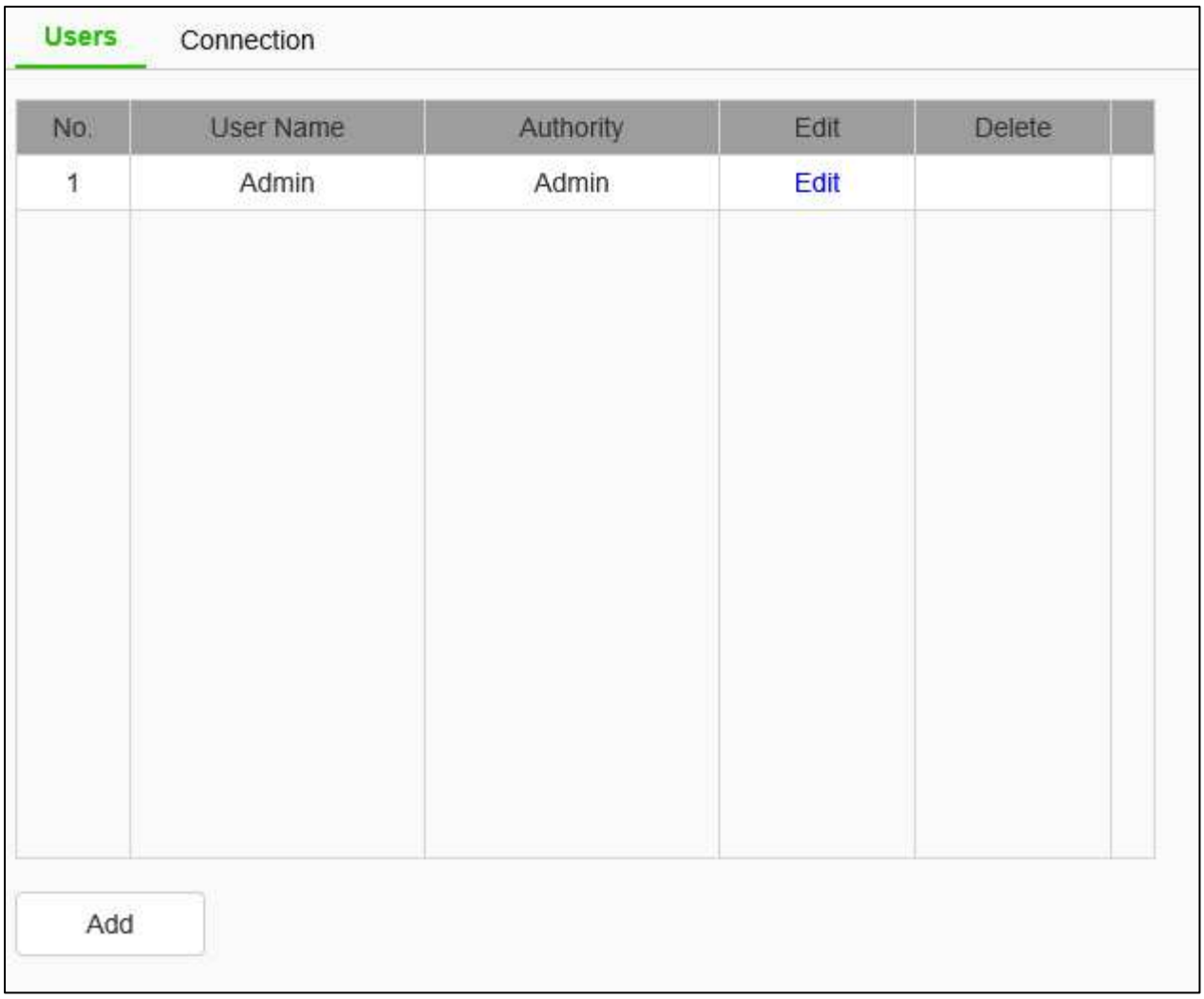

User management setting interface

[New]

To add a new user, you need to enter the user name, password and permission. The user name and password can only be entered in English letters and numbers. After the above three items are filled in, click the [Save] button.

Note: only users with administrator rights can add and modify users.

[Edit]

In the user list, click [edit] to open the password modification prompt box, input the old password, new password and confirm the password, and then click Modify.

[Remove]

In the user list, click [delete] to open the prompt box and click OK.

User management - > Connection

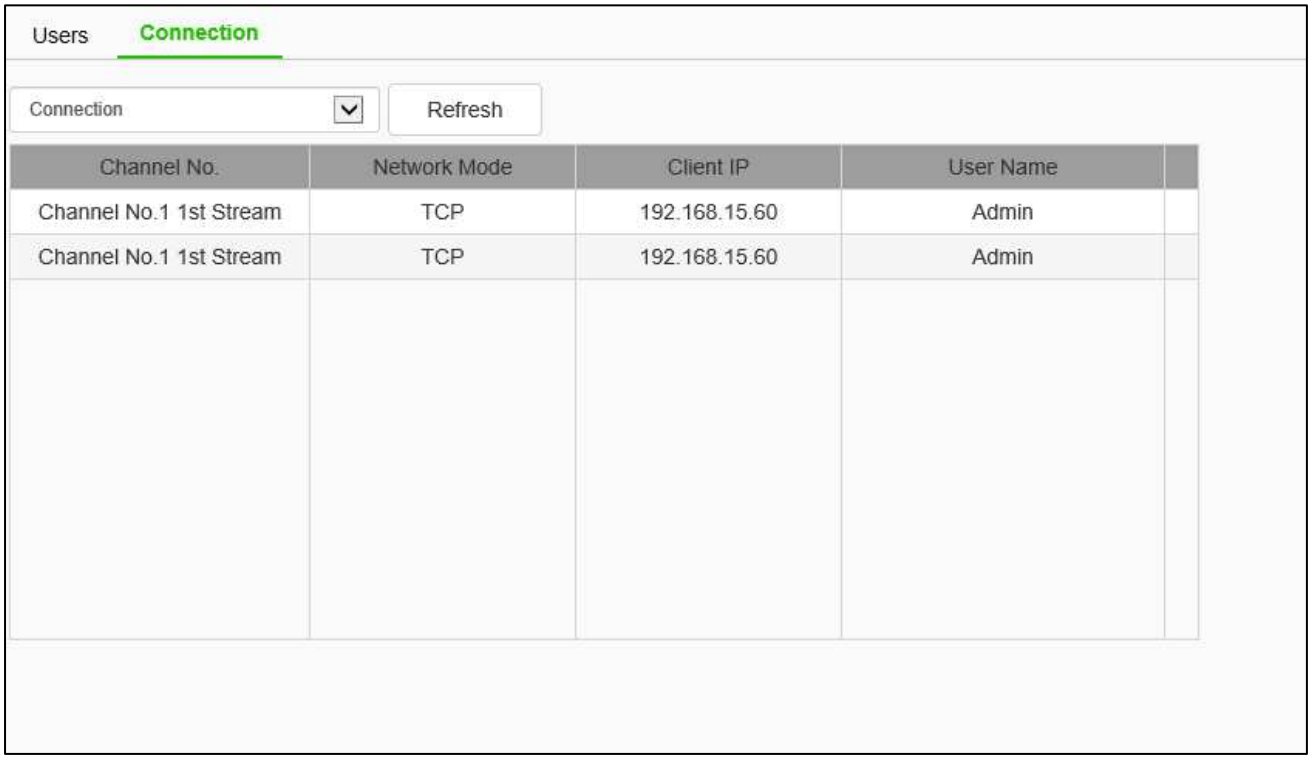

Connection information interface

Display the detailed list of connecting / logging in the device, including channel type, network mode, client IP and user name. Click [Refresh] to update the list.

5.16.3. Maintenance

Maintenance - > Maintenance

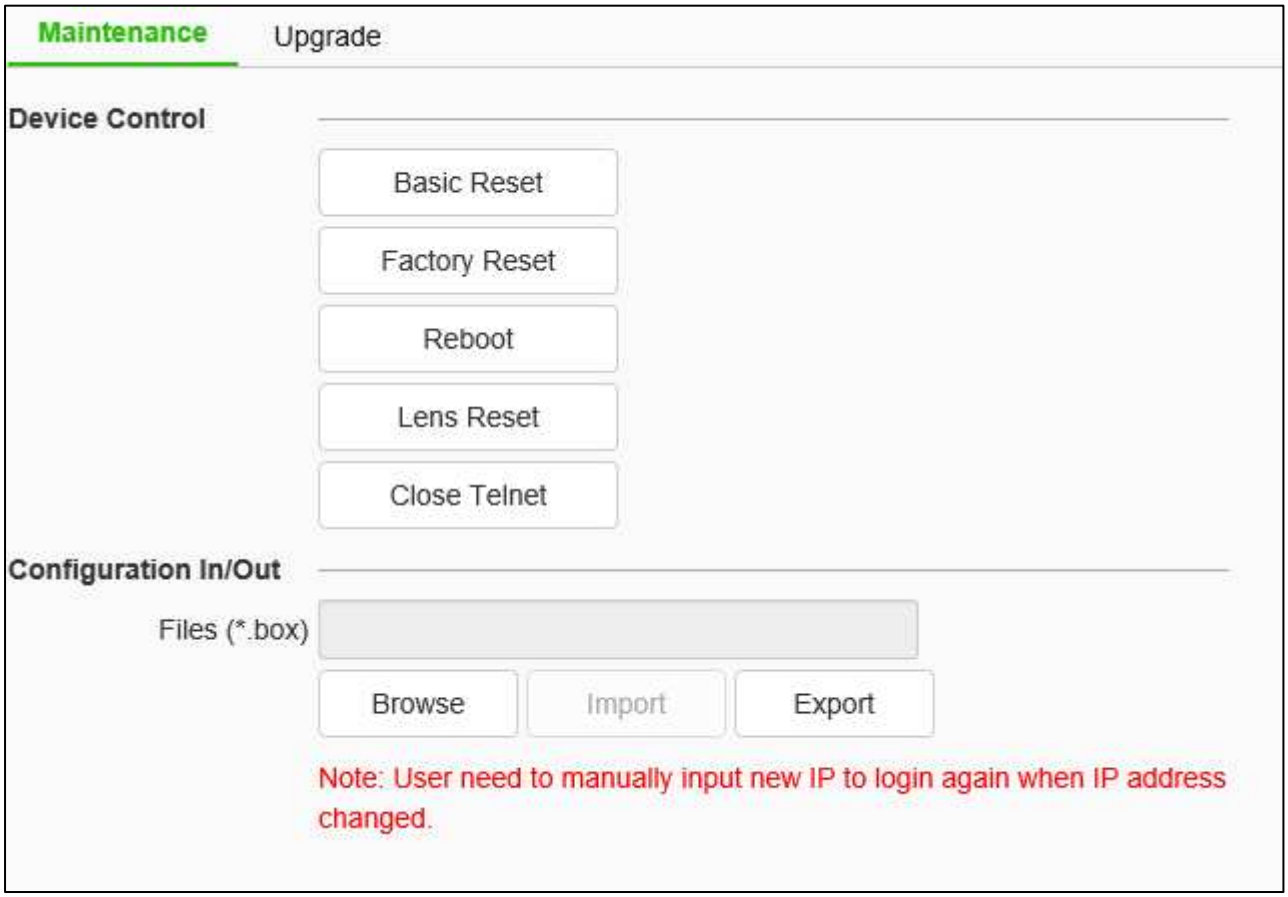

System maintenance interface

[Device Control]: allows customers to perform [restore default], [simple restore], [restore factory], [restart equipment], [aperture correction], [lens reset], [disable / enable ABF], [Open Telnet] and other operations. Because the functions of different models are different, please refer to the actual interface.

[Import]/ [Export]: used for equipment maintenance, mainly divided into three categories:

(1) [Event Server] options include alarm time period and linkage item setting information, excluding intelligent analysis.

(2) [Smart Analytics] options include settings related to intelligent analysis, including rules, time periods, etc.

(3) [System Setting] options include all setting information except the above alarm, intelligent analysis, logo, storage strategy and local setting, including video parameters, HD parameters, character superposition, video recording strategy, network setting and other information.

Maintenance - > Upgrade

System upgrade interface

[Version Information]: it includes equipment information such as [factory ID], [MAC], [Hardware Version], [Kernel Version] and [Web Version].

[System upgrade] => [Cloud upgrade]

The version of equipment can be detected by itself automatically. This operation shall be completed in guide of technician of the company.

Click “Detect” to detect whether the current version is the latest.

Click “Upgrade” to upgrade the program on cloud platform.

[Firmware Upgrade]: the user can select a local legal. Box or. Bin file to upgrade the device remotely. The upgrade operation of the kernel program shall be conducted under the guidance of the company's technical personnel.

[Browse]: find the upgrade file in the pop-up window.

[Upgrade]: upgrade to the latest version through the network.

5.16.4. Local PC Settings

Local PC setting interface

[Record Videos/Live Snapshots/Playback Snapshots/Video Clips/Downloaded Files/VCA Snapshots/Protocol Type]: the storage path can be set.

[Local Capture Format]: select [JPG], [BMP]. To send the snapshot pictures to FTP and email, JPG must be selected.

5.17EW

Alert setting interface

In the alert setting interface, the user can set alert parameters according to the actual situation or preference of the site.

Plan setting:

Step 1 check enable effective alert algorithm.

Step 2 select [Type], set perimeter alert or trip line alert, and set the effective time of alert scene.

Step 3 adjust the scene and draw warning area or warning line. Perimeter alert default full screen is alert area. If you need to adjust, you need to clear the line and draw again.

Step 4 select a preset alert plan.

Step 5 click the "save" button to complete the algorithm setting and exit the alert setting interface to take effect.

User-defined settings:

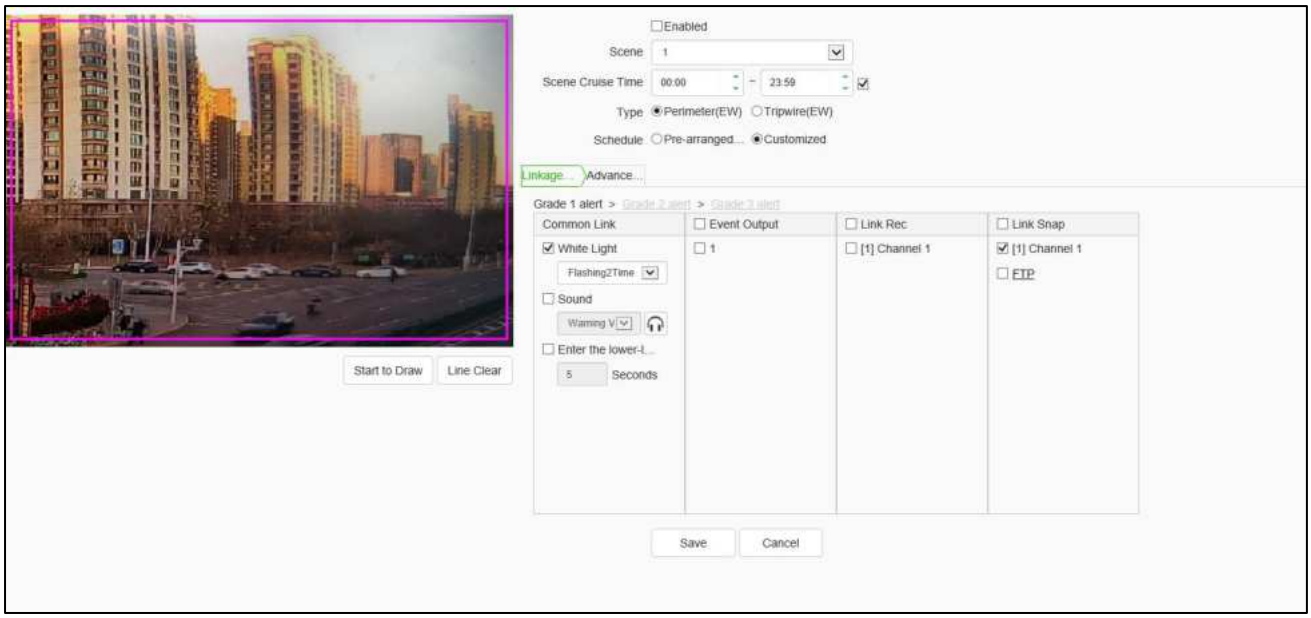

Step 1 check enable effective alert algorithm.

Step 2 select alert type: perimeter alert or trip line alert, and set the effective time of alert scene.

Step 3 adjust the scene and draw warning area or warning line.

Step 4 select custom alert template.

Step 5 set linkage item or advanced parameter. Among them, linkage items can be set with three levels of warning at most, and each level of warning effect can be set separately.

Step 6 click the "save" button to complete the algorithm setting and exit the alert setting interface to take effect.

Description:

(1) The device supports setting up multiple scenes. You can set up different scenes through the above steps.

(2) In the perimeter alert, the plan of "explosive multi-level acoustooptic alert" is: after the target intrudes into the alert area, the white light flashes strongly and the voice calls.

(3) "Progressive multi-level acoustooptic alert" plan is: it is divided into three levels by default, and the warning effect is enhanced step by step. When the retention time in the upper level is greater than the set value, it will enter the next level.

(4) The linkage settings in the user-defined template can set up to three levels of linkage, and the linkage items can be set separately in each level of settings.

(5) In linkage setting, the constant light option of linkage white light indicates that the white light will be turned on in case of alarm, and will be turned off automatically after the alarm is cancelled.

(6) Advanced parameters in the user-defined template include: Defense week, detection mode, trigger alarm target, trigger sensitivity, maximum tracking time, display rule and target box setting, etc.

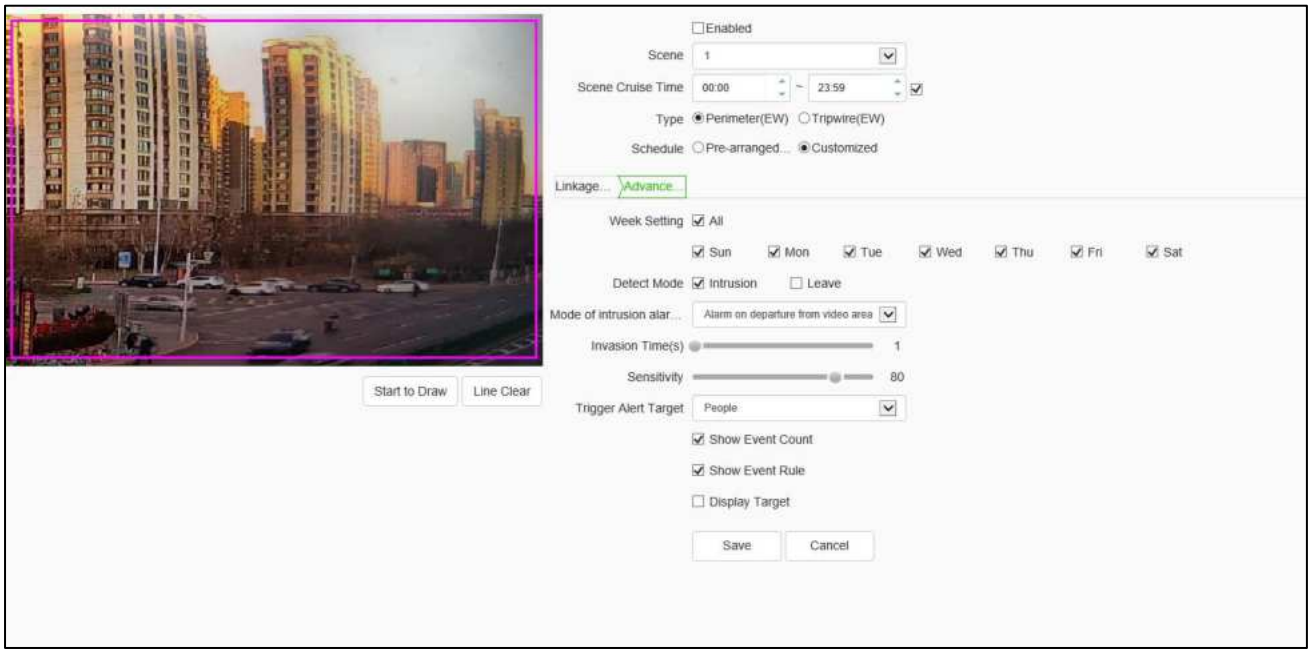

(7) The alert types are divided into perimeter alert and trip line alert, aiming at the intrusion area, departure area and cross-border behavior. The perimeter alert is the intrusion zone alert by default. Users can modify the detection mode in the advanced settings of the user-defined template.

(8) The warning detection target defaults to person and vehicle. Users can user-defined advanced settings according to specific needs.

(9) The longest tracking time takes effect when the linkage tracking, which means that when the time is reached, the tracking action will stop and return to the alert monitoring scene.

(10) The user-defined alert tone can be set in the following two ways: 1. Download audiomaker.exe software, record the warning tone according to the help document of the software, make an upgrade package, and then download it to the camera through the camera's web page upgrade mode. 2. Download the mobile client through the QR code button in the preview interface, and record and upload the warning tone for the devices connected to the Internet that support custom warning tone.

6 Simple Troubleshooting

6.1 System Failure

6.1.1 Unidentified USB flash disk or micro SD card

Possible causes:

(1) Plug and unplug the U disk or micro SD card, and operate in case of power failure;

(2) There is a problem with the partition information of the disk, which causes the device to be unrecognized and needs to be reformatted;

(3) The card is loose, unplug it again after power failure, and then start the equipment;

6.1.2 Unrecognized wireless network card

Possible causes:

(1) Plug and unplug the wireless network card, which needs to be operated in case of power failure;

(2) The static electricity causes the network card to enter the protection state, so the equipment needs to be powered on again;

(3) The working state of the wireless network card is unstable, and the hardware of the wireless network card is faulty, which needs to be replaced; it is necessary to obtain the latest list of wireless network cards supported from the company.

6.2 Network Failure

6.2.1 The device is powered on and cannot be searched in the IP searcher

Troubleshooting steps:

(1) Confirm whether the camera is powered on normally, whether the host network card and driver are normal, whether the network cable connection is normal, and whether the network topology connection is smooth;

(2) Connect the host computer and HD network camera directly with the cross network cable. If it still fails, reset and retest the camera;

(3) Restart the searcher software, or select the IP in the same network segment with the device;

(4) Restart the computer;

(5) If there are spare hosts and HD network cameras, they can be replaced for testing;

(6) Check whether the equipment has passed the 4G card networking;

(7) If you still have any questions, please contact us;

6.2.2 Image cannot be connected normally in IE

(1) Download and install IE control for the first login;

(2) Add the device IP to the trusted address;

(3) Re install IE control;

6.2.3 After logging in the network front-end product, it is found that the video is not the video of the front-end product

Possible causes: there are network devices with the same IP and MAC addresses in the network;

Troubleshooting steps:

(1) Disconnect the network connection of the current device, Ping the corresponding IP, and check whether there is a return packet;

(2) Use a searcher to search for devices with duplicate IP addresses, disconnect the device network, and then search for verification;

(3) For public network connection, the port selected during login is the port mapped to other devices;

6.2.4 The camera can be pinged but cannot log in normally

Possible causes:

(1) Port 3001 is blocked by firewall;

(2) The port number used for login is incorrect;

(3) Incorrect user name and password for login;

(4) Too many clients connected, the number of device connections is full;

(5) The camera has set up a black and white list, and is forbidden to log in from the current computer. You need to modify the settings first;

(6) Check whether the listening port of the device is the same as the port connected and used on the software through the searcher;

6.2.5 UDP cannot connect to video

Possible causes:

(1) Other clients on the same machine have connected to the video;

(2) The port of UDP conflicts with that of other application programs of the computer. Modify the device IP to test;

6.2.6 The videos of two network front-end products are alternately connected or disconnected

Possible causes:

(1) IP address conflict can be viewed by Searcher;

(2) MAC address conflict can be checked by Searcher;

(3) The IP address conflicts with the IP address of other computers;

6.3 Operation Failure

6.3.1 Video cannot be connected normally in IE

Troubleshooting steps:

(1) Confirm that the host IP address and the network camera address are set in the same network segment, if not in the same network segment, change to the same network segment;

Note: for example, in different network segments, the routing of these two network segments must be ensured.

(2) Confirm the version of IE, it is recommended to install IE 6 and above;

(3) Confirm the normal installation of the video card driver and DirectX, it is recommended to install the latest video card driver and DirectX;

(4) Temporarily shut down the anti-virus software and software firewall for further testing; temporarily shut down the system's own firewall for further testing;

(5) Delete the previously downloaded control when connecting, reconnect and download the installation control test;

(6) Replace the main engine for test;

(7) If you still have any questions, please contact us;

6.3.2 Unable to connect sub code stream

Possible causes: there are too many other clients connected, and the number of connections is full;

6.4 Control Failure

6.4.1 In IE, it can normally control the PTZ with 485 connection, but it cannot be controlled in the software

Troubleshooting steps: please confirm that the correct protocol, address and baud rate have been selected in the software;

Possible causes:

(1) Please confirm that the address setting in the software is correct;

(2) If easy7 software is used, ensure that "system settings -[host] interface - Video Channel - Equipment [address and protocol] content settings are correct";

(3) If there are still problems, please contact our after-sales technical personnel;

6.5 Video Failure

6.5.1 The software can connect the video normally, but the image is unstable, intermittent, frame loss and other phenomena

Troubleshooting steps:

(1) Exit the software, check the CPU utilization of the machine, and eliminate the cause of insufficient configuration of the machine itself or whether the host is poisoned;

(2) Ping the device to see if there is packet loss;

(3) Use the bandwidth test software to test the network bandwidth. If the bandwidth is insufficient or unstable, please contact the network operator;

(4) When the network bandwidth is insufficient and the video fluency is guaranteed, we first consider reducing the resolution of the image; in the case of not changing the resolution, in the IE image quality setting, change to the variable bit rate mode, and increase the values of the best quality and the worst quality in the image quality, so as to appropriately reduce the video quality;

(5) Whether the system performance is insufficient due to too many functions being turned on, such as character stacking, key area, intelligent analysis and other functions occupying the performance, first turn off some functions and then verify whether the video is normal again;

6.5.2 If the video connection display is normal, but the image is black screen or seriously distorted

Other features: no character superimposition, or the image is seriously distorted but can display normally after zooming in

Possible causes:

(1) DirectX version is lower than 9.0c;

(2) The video card driver is incorrect, resulting in the DirectX acceleration function not starting, windows The performance of Server 2003 is more obvious;

(3) Full screen occlusion is set;

6.5.3 If the video can be connected under IE, but the display in the software is abnormal

Troubleshooting steps:

(1) Confirm whether the software version is correct;

(2) Confirm the correctness of "IP address" and "server type" of "server edit information" in the software; it is recommended to adopt "main code stream + TCP" mode in LAN, and WAN can adopt "bystream + TCP" mode;

(3) Confirm that the video is connected to the main interface of the software;

(4) Restart the software and connect;

6.6 Audio Failure

6.6.1 If video browsing and control are normal, but there is no front-end audio

Troubleshooting steps:

(1) Confirm that the driver and wiring of the corresponding sound card of the host are correct, and you can play music to test whether it works;

(2) Confirm that "audio and video stream" is selected instead of "video stream";

(3) Verify the correctness of front-end pickup equipment and wiring;

(4) Refer to 6.6.2 audio signal weak solution;

6.6.2 Weak audio signal

Troubleshooting steps:

(1) Check whether the audio input type is selected correctly. The default audio input of the

external passive mic model is MicIn. If the external active audio is used, it needs to be set to LineIn;

(2) Adjust the audio input volume value through IE, and check whether it is too low;

(3) The back-end sound playing unit must be an active speaker;

6.7 Alarm Failure

6.7.1 No alarm output

Troubleshooting steps:

(1) Confirm that the input and output signal wiring mode of the alarm is correct, ensure that the signal is the switch signal, and do not connect the wiring wrongly or falsely;

(2) Check whether the port setting of the network video server is correct and whether the enabling setting of the input and output ports is correct through IE;

(3) Confirm whether the alarm input and output equipment is normal;

6.8 Parameters does not take effect after settings

6.8.1 Abnormal power off after parameter setting

Possible cause: parameters can be saved normally only after 1 minute of setting, unless automatic restart or IE click [system restart], abnormal power failure, etc. may cause parameters not to be saved normally.

6.8.2 Failure to restart the system as required

Possible cause: some parameters have been changed. You need to restart the system, otherwise it may not take effect.

6.9 Others

6.9.1 The capacity of the used U disk computer on the camera becomes smaller

Possible cause: when the camera formats the U disk and micro SD card, special partition operations are carried out, resulting in part of the capacity cannot be recognized on the computer. If you want to continue to use ordinary storage media, you need to reformat it on your computer.

Solution:

(1) Download the installation software BOOTICE.EXE;

(2) Insert the USB stick or micro SD card to be formatted into the computer. Open the software, select the corresponding U disk in the target disk, and then select partition management - > repartition and format - > select USB-FDD mode - > select FAT32 or NTFS system format - > input volume label, such as "U disk" - > finally click OK to finish the U disk repartition.

7 After-sales Services

For the high-definition network series camera produced in our company, we promise one-year warranty. During the product warranty period, the company provides free maintenance services, but in case of the following circumstances, the material cost and labor cost shall be charged as appropriate:

(1) The camera is damaged due to the operation not in accordance with the user manual;

(2) Lightning, fire and irresistible natural disasters;

(3) Damage caused by matching problems due to poor product design of other manufacturers;

(4) Due to our continuous adoption of new technology, product parameters are subject to change without notice.

Appendix I :Lightning Protection and Surge Protection

Lightning and surge protection shall be considered for outdoor cameras. On the premise of ensuring electrical safety, the following lightning protection measures can be taken:

- The signal transmission line must be kept at least 50 meters away from the high-voltage equipment or high-voltage cable;
- Outdoor wiring shall be routed under the eaves as much as possible;
- For the open area, the sealed steel pipe must be buried for wiring, and the steel pipe shall be grounded at one point, and the overhead wiring is absolutely prohibited;
- In strong thunderstorm area or high induced voltage area (such as high-voltage substation), additional high-power lightning protection equipment and lightning rod must be installed;
- The lightning protection and grounding design of outdoor devices and lines must be considered in combination with the lightning protection requirements of buildings, and meet the requirements of relevant national standards and industry standards;
- The system must be equipotential grounded. The grounding device must meet the double requirements of system anti-interference and electrical safety, and shall not be short circuited or mixed connected with the zero line of the strong current network. When the system is grounded separately, the grounding impedance shall not be greater than 4 Ω, and the cross-sectional area of the grounding conductor shall not be less than 25mm2.

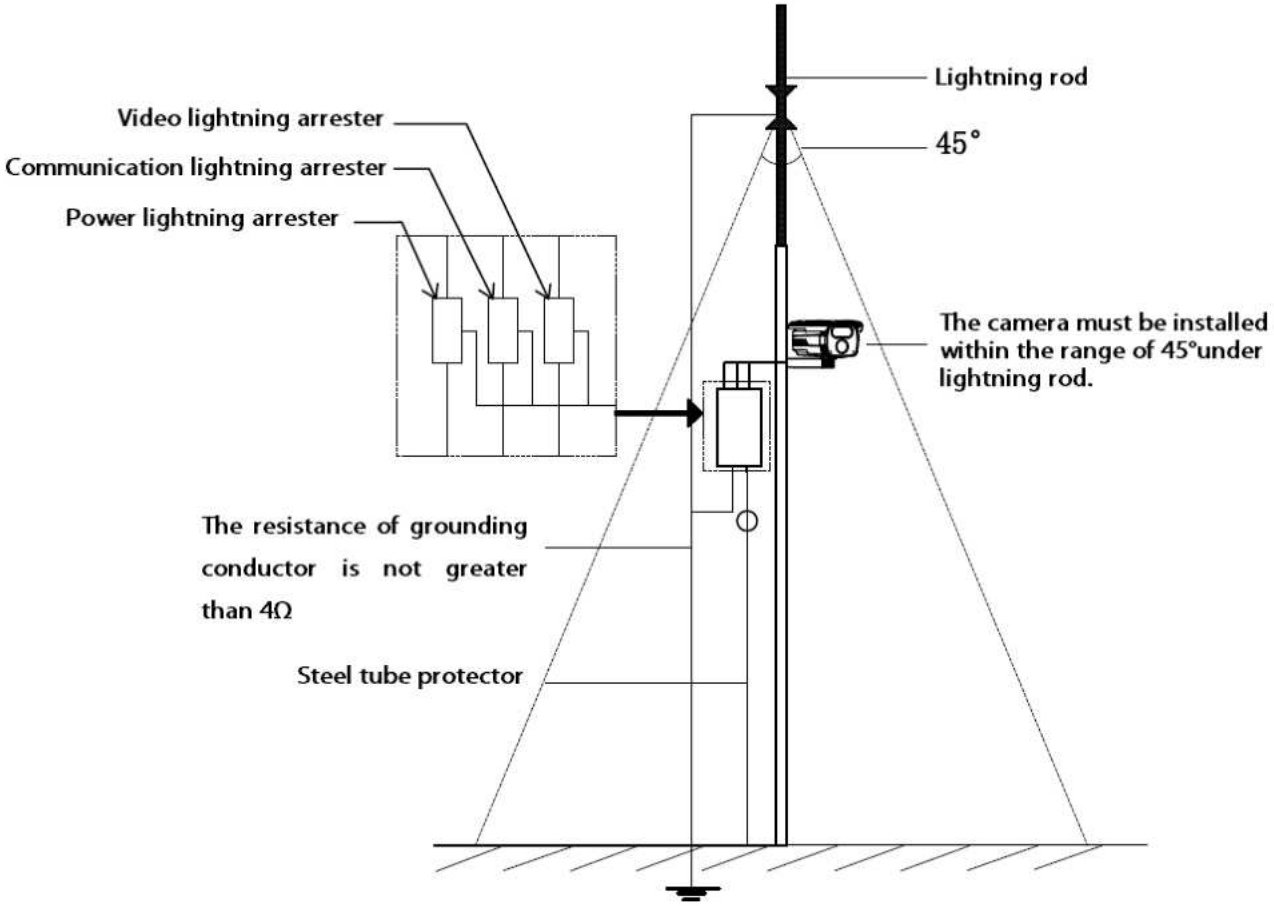
Lightning rod
Video lightning arrester
45°
Communication lightning arrester
Power lightning arrester
The camera must be installed within the range of 45°under lightning rod.
The resistance of grounding conductor is not greater than 4Ω
Steel tube protector

Appendix 2: Default parameters and recommended configuration

Default parameters of HD series webcam

[Default IP parameters] IP address: 192.168.1.2; subnet mask: 255.255.255.0;

Gateway: 192.168.1.1; DNS: 192.168.1.1

If the device supports activation, the password is the one set at the time of activation.

If the device does not support activation, the password is 1111.

[Onvif protocol connection] VLC connection address: rtsp://192.168.1.2:554

If the device supports activation, the password is the one set at the time of activation.

If the device does not support activation, the password is 1111.

Recommended system configuration

Type	Recommended computer configuration
CPU	Intel Core i7 2600 quad core and above
Memory bar	4G and above
Hard disk space	>250G
operating system	Windows 7 and above
Browser	IE 8 and later
Direct X	10.X
Resolution	1920 × 1080 or higher
Network card	10 / 100 / 1000 Base-T Ethernet
Graphics card	Independent video card / video memory 512M